Approved For Release 2000/06/06 : CIA-RDP80-00915A000100040001-9

1 - D/OJCS

OJCS MANAGEMENT STUDY

Prepared for

OFFICE OF JOINT COMPUTER SUPPORT

April 1976

by

OJCS SPECIAL PROJECTS STAFF

[redacted]

25X1A

Approved For Release 2000/06/06 : CIA-RDP80-00915A000100040001-9

Approved For Release 2000/06/06 : CIA-RDP80-00915A000100040001-9

OJCS MANAGEMENT STUDY

PREFACE

This study document addresses problems that are encountered by the Office of Joint Computer Support in providing central computer processing services for the Agency and coordinating Agency requirements for Automatic Data Processing Services, equipment, and software. Proposed actions are included; however, further actions are recommended and implied and should amend and supplement this study.

Approved For Release 2000/06/06 : CIA-RDP80-00915A000100040001-9

Approved For Release 2000/06/06 : CIA-RDP80-00915A000100040001-9

OJCS MANAGEMENT STUDY

TABLE OF CONTENTS

Para.		Page
Preface		iii
	SECTION I	
	INTRODUCTION	
1.1	PURPOSE AND SCOPE	1-1
1.2	OBJECTIVES	1-1
1.3	METHODOLOGY	1-2
	SECTION II	
	STUDY ELEMENTS	
2.1	PROBLEM SUMMARY	2-1
2.1.1	Front Office or Division Management Related	2-1
2.1.2	Technical or Organizational Environment Related	2-1
2.1.3	Operational Shortcomings	2-2
2.1.4	General Concern	2-2
2.2	SITUATION ANALYSIS	2-3
2.2.1	Major Computer Complex is Unreliable and Heavily Loaded	2-3
2.2.2	Complexity and Change Introduced to Maximize Throughput, Reliability, and Flexibility has introduced only Complexity	2-4
2.2.3	Normal Management Procedures and Controls have not been instituted and maintained	2-5

Approved For Release 2000/06/06 : CIA-RDP80-00915A000100040001-9

Approved For Release 2000/06/06 : CIA-RDP80-00915A000100040001-9

Para.			Page
	2.2.4	The work load has increased significantly while the Staff has not	2-6
	2.2.5	A strong leader, a mis-aligned organization, many technical problems and parochial Division Chiefs combine to make crisis management the norm	2-6
	2.2.6	Organizational elements have become isolated and parochial	2-7
	2.2.7	Planning is aimed primarily at resolution of current crisis	2-8
	2.2.8	Overall mission policies and procedures are unclear	2-9
2.3		PROPOSED ACTIONS	2-10

APPENDIXES

A. RE-ALIGNED ORGANIZATION

B. MASTER PROBLEM LIST

C. AVAILABLE STATISTICS REPORT

D. INCIDENT CARD

E. AVAILABLE SYSTEM PERFORMANCE CHARTS

F. GC-03 COMPUTER CENTER DIAGRAMS

1. Processor Service Schematic

2. Data Access Schematics and Charts

G. PROPOSED TREND CHARTS

Approved For Release 2000/06/06 : CIA-RDP80-00915A000100040001-9

Approved For Release 2000/06/06 : CIA-RDP80-00915A000100040001-9

SECTION I

INTRODUCTION

1.1 PURPOSE AND SCOPE

This document identifies and analyzes problems presented by OJCS Management and proposes actions which will correct and improve OJCS' ability to accomplish its mission.

1.2 OBJECTIVES

The objective of this study as outlined in a 3 March 1976 memorandum from Director of Joint Computer Support is: to study OJCS and provide recommendations for improving the management of operations and services provided by this office.

Those operations and services are defined as follows:

OJCS MAJOR FUNCTIONS

- Computer Processing Service
- Applications Advice and Service
- Planning — System design ?
- Policy Development
- Administration

The scope of the study is limited to the use of current and currently planned resources.

Approved For Release 2000/06/06 : CIA-RDP80-00915A000100040001-9

Approved For Release 2000/06/06 : CIA-RDP80-00915A000100040001-9

1.3 METHODOLOGY

All management and front office staff were interviewed to obtain data on the functions, roles, responsibilities, and problems perceived by that group as belonging to OJCS. This information and the available hard data were used to generate a situation analysis outlining the current major problems of OJCS.

The specific problems found were grouped as operational and administrative in the general sense and were used to spot common problems which need resolution. The final list of 65 problems is the common set of over 85 encountered and no attempt has been made to reduce the list further.

Given a situation analysis and a list of specific problems, specific actions were probed to determine which problems could be resolved in batches and what new problems would be generated by these actions.

The resulting recommendations for specific action and continuing investigation are being submitted to D/OJCS for review prior to involving further OJCS management in analysis of the results and development of action plans.

Approved For Release 2000/06/06 : CIA-RDP80-00915A000100040001-9

Approved For Release 2000/06/06 : CIA-RDP80-00915A000100040001-9

SECTION II

STUDY ELEMENTS

2.1 PROBLEM SUMMARY

2.1.1 FRONT OFFICE OR DIVISION MANAGEMENT RELATED

The problems in this category center around the lack of well defined divisional responsibility which covers many problems which arise and the resulting need to assign "stuckees" to solve problems which invariably cut across divisional lines. This problem is amplified by a heavy work load involving constantly changing priorities, the lack of a game plan or high level planning, a lack of clear cut management objectives, ineffective team work at the division level and too few people to tackle the large number of technical problems effectively. This problem is perceived from the top as being a lack of initiative in assuming responsibility, and from the bottom as excessive dabbling in the details of division operations. Both views are accurate.

Problems: 1,5,6,11,12,15,23,25,26,27,29,34,36,37,41,44,49, 51,53,54,61,63,64.

2.1.2 TECHNICAL OR ORGANIZATION ENVIRONMENT RELATED

The environmental factors can be categorized in general as facts of life. There is an uncontrolled work load placed on the organization, there are many applications of questionable value, most of the facility is operated at 100% capacity over vast periods of time, the on-line loading of computer systems is building up over a relatively short period of time while the organization of the resources and the tools are primarily batch oriented. A great many of the specific problems are simply ways of life in a service organization, particularly in the ADP service business.

Problems: 2,21,22,24,28,33,38,39,40,42,43,45,55,57,60.

Approved For Release 2000/06/06 : CIA-RDP80-00915A000100040001-9

Approved For Release 2000/06/06 : CIA-RDP80-00915A000100040001-9

2.1.3 OPERATIONAL SHORTCOMINGS

In the crush of heavy work loads, constant change and crisis management, discipline has slipped in the administration of hardware and software resources. Much data is generated and available to indicate the status and trends in the center but it is not analyzed such that intelligent action can be taken on it. There are not visible measurements of trends such that we know how much better or worse the situation is at any point than at some point in the past. This data can normally be generated upon request but is not used as a normal management tool. Of particular note is the lack of detail in data concerning each piece of equipment to determine precisely which pieces cause problems and need specific attention. The objectives of much of the change which is in process seem to have been lost. While there is a constant pursuit of some future system which will solve all of the problems currently known, the current system seems to have been abandoned in the process.

Problems: 3,4,7,8,9,10,13,14,16,17,20,30,31,35,47,48,50,52, 56,58,59,62,65.

2.1.4 GENERAL CONCERN

There is a general concern that integrated databases may not be secure or private and that technical security may not be adequate. There is a feeling that nothing will happen in this area until a crisis is encountered. Credibility is seen as poor based on current performance. There is no perceived concern within or outside of OJCS for the cost of ADP service. Further, if there were an ADP policy and direction within the Agency, then the training offered by OJCS should be tailored to fit with that policy. The elements in this category are things which need some relatively immediate attention such as security, and also those elements which should be factors in laying out the future plans. There is particularly a feeling that if cost consciousness can be made a more integral part of the management process within the Agency, that the applications of the computer center will be of higher quality and thus more cost effective.

Problems: 18,19,32.

Approved For Release 2000/06/06 : CIA-RDP80-00915A000100040001-9

Approved For Release 2000/06/06 : CIA-RDP80-00915A000100040001-9

2.2 SITUATION ANALYSIS

2.2.1 MAJOR COMPUTER COMPLEX IS UNRELIABLE AND HEAVILY LOADED.

The major Computer Complex is made up of some of the largest most advanced computers available from industry. There is no problem with antiquated equipment or equipment which is mismatched to the tasks imposed upon it. Therefore, given normal maintenance on both hardware and software the system should be extremely reliable, performing its intended functions predictably seven days a week, 24-hours a day. In actuality the computer system is subject to a very large number of failures many of which are very difficult to analyze as there is not an obvious relationship among many of the types of problems which are encountered. The work load is extremely heavy but this is considered to be a factor only when the periodic unavailability of key elements slows processing, thus generating a backlog which exagerates the already heavy load. One of the effects is that many key applications can not be run as scheduled due to the unavailability of the key pieces of equipment, thereby inconveniencing large numbers of users or requiring frequent changes of schedules and priorities. This situation leads to a chaotic environment in which it is even more difficult to track down problems as they occur.

The overall difficulty here seems to be that of an environment of constant change in the interconnection of equipment and in operational software. This, coupled with a failure to bring hardware and software maintenance under control, have permited the reliability situation to degenerate. Data which is available is not summarized, analyzed and used to assess the situation due to a shortage of people applied to this task and thus all action is relatively short term crisis fighting.

While processing capacity is being addressed by the Eighteen Month Plan, the adequacy of the increase in processing capacity to accommodate the increasing work load is questionable. While it is generally agreed that the existing processing capacity is being taxed by today's work load, little, if any, effort is expended to analyze the effectiveness of existing applications or the impact of future changes or new applications. This lack of analysis further complicates an already complex environment by requiring the allocation or reallocation of significant system resources when problems are encountered.

Approved For Release 2000/06/06 : CIA-RDP80-00915A000100040001-9

Approved For Release 2000/06/06 : CIA-RDP80-00915A000100040001-9

The movement of OJCS from a batch processing operation to a batch and on-line application operation has not been accompanied by the allocation of equipment and human resources needed to respond adequately for the new environment.

2.2.2 COMPLEXITY AND CHANGE INTRODUCED TO MAXIMIZE THROUGHPUT, RELIABILITY AND FLEXIBILITY HAS INTRODUCED ONLY COMPLEXITY.

To cope with the large processing requirements, a high degree of connectivity has been developed within the center. IBM's ASP system has been installed with flexibility to switch systems in and out of the ASP environment and an attempt has been made to employ the latest version of IBM software. This coupled with the employment of large databases and the on-line use of the system, has led to a very complex environment making problems difficult to isolate and resolve. The flexibility which has been incorporated is primarily theoretical since switching of major elements involves; a) decisions as to which on-line applications and/or types of service will be denied or supported since reundancy is not available, b) careful planning, and c) careful operator execution. These decisions and actions are made at the operator level. To support this flexibility, the Computer Processing Branch (CPB/OD) has developed operator-technicians who serve to oversee changes to the system and provide communication and documentation. This further reduced the already limited number of operators. The reliability which was to have been achieved by having backup equipment (if available) has actually been reduced since most processing must pass through more serial processors and processes than with a stand alone system. The probability of a failure in the process is higher although the ability to restart on a similar configuration has been enhanced.

While an objective of the ASP system was to save operator resources, ASP also requires common access by all ASP processes to all databases in order to be effective. This latter requirement has neither been realized nor re-analyzed to determine whether throughput is optimum in the current environment or whether for example, paired stand-alone systems might offer greater total processing capacity and reliability.

Approved For Release 2000/06/06 : CIA-RDP80-00915A000100040001-9

Approved For Release 2000/06/06 : CIA-RDP80-00915A000100040001-9

Complexity is clearly a problem in that it makes current performance difficult to analyze. While the objectives to be achieved by introducing this complexity were initially quite clear, they were not well defined quantitatively nor has performance been analyzed against these objectives.

2.2.3 NORMAL MANAGEMENT PROCEDURES AND CONTROLS HAVE NOT BEEN INSTITUTED AND MAINTAINED

While there are some reports kept in various parts of the organization and while there is a great deal of data available concerning the actual state of affairs, both in hardware and software, there is no consistent, concerted management attempt to marshal the information available as a useful management tool. There have not been performance expectations developed in many areas and the only objective is to get out of the current crisis or to improve whatever the performance seems to be at the time. The lack of management norms applies from the most technical topics to the personnel management function. Lack of such information makes it difficult to communicate the current status of affairs to vendors, to users, to budgetary staffs or to upper management. There should be hard data and trend information kept in about 20 different areas and this information is very seldom available. (See Appendix G).

In searching for this type of information one can always find an example of something in a desk of something that has just been developed or was used a year ago but there is no concerted effort to track that current situation against objectives.

Appendix E shows a list of available reports generated by Operations Division's Resources Management Branch and the Planning Staff that could be adapted to management controls with the proper procedures and direction.

Recent events have highlighted the lack of attention to technical security and Quality Control. Technical security is acknowledged as a problem throughout OJCS Management and is felt to be an environmental problem (thats just the way it is). In the present organizational situation, only a severe security violation will direct attention to concrete action.

Approved For Release 2000/06/06 : CIA-RDP80-00915A000100040001-9

Approved For Release 2000/06/06 : CIA-RDP80-00915A000100040001-9

The lack of Quality Control is apparent throughout the organization, such as 1) design standards and guidelines 2) database maintenance procedures, 3) performance standards, 4) product quality, 5) acceptance testing of production applications, 6) test and analysis of questionable or high resource-use applications, etc.

2.2.4 THE WORK LOAD HAS INCREASED SIGNIFICANTLY WHILE THE STAFF HAS NOT

Over the past five years the work load has increased from 400 - 600 jobs per day to better than 1600 jobs per day, (a growth of 266%). The staff in the meantime has increased from 250 to 350, (a growth of 71%). For example, Operations Divisions' Computer Processing Branch has grown from 51 staff positions to 58 staff positions during the aforementioned 5 year period, (a growth of 11.4%). Further, as the nature of the work has gone from batch processing to batch plus interactive processing, very little new talent has been brought aboard to accommodate this change. There is no question that there are areas within the organization which are running shorthanded and this has led to the lack of information upon which to base sound management decisions.

The resources necessary to solve problems of system stability, hardware reliability, measurement and tuning, system capacity and crisis resolution are organizationally dispersed. This, coupled with the inability of the Division Chiefs to focus already thin resources to the resolution of standing problems leads to a standing wave of crisis with top-down direction to solve the ones momentarily most painful.

2.2.5 A STRONG LEADER, A MIS-ALIGNED ORGANIZATION, MANY TECHNICAL PROBLEMS AND PAROCHIAL DIVISION CHIEFS COMBINE TO MAKE CRISIS MANAGEMENT THE NORM

The organization is aligned such that very few divisional responsibilities can be carried out without the coordination of at least two and sometimes four other organizations. While coordination will always be required for a great many activities it is currently required on even the most trivial

Approved For Release 2000/06/06 : CIA-RDP80-00915A000100040001-9

Approved For Release 2000/06/06 : CIA-RDP80-00915A000100040001-9

tasks. This means that the achievement of virtually any task is complex and time consuming. This coupled with a strong leader who expects results in a difficult technical environment and Division Chiefs who are frustrated by the lack of ability to achieve all of their objectives within their own domains has precipitated a large number of crises. Virtually any problem requiring prompt action requires the appointment of a "stuckee" since it will in all probability not fall distinctly within the charter of one particular division.

No Division (except perhaps AD) has the resources and authority to achieve definable end results. For example OD's goals of a stable system is compromised by SED's and Front Office's need for changes. SED's total-function objective is dependent on stable hardware and consistent Front Office (and user) priorities. USD production is dependent on both of the above as well as well-documented, efficient applications code. There is heavy dependence on other Divisions for achievement of major portions of divisional tasks.

The Division Chiefs are seen as not cooperating to solve problems, but rather as playing roles and pointing fingers. This seems in part to be a lack of clearly defined responsibilities which they own and in part a vague commitment to do everything for everyone without being able to predict what that means.

2.2.6 ORGANIZATIONAL ELEMENTS HAVE BECOME ISOLATED AND PAROCHIAL

The divisions in particular have become isolated and parochial in their views of their roles and the role of OJCS within the Agency. Constant crisis and frustration have precipitated the situation, and only planning, management, communication, and the realignment of motivation can fix it. While a certain level of parochial interest is beneficial in generating an espirit de corps, it should be a part of an overall sense of mission and participation rather than the currently felt environment of withdraw and blame. The parochial interest, however, has not contributed to espirit de corps of the

Approved For Release 2000/06/06 : CIA-RDP80-00915A000100040001-9

Approved For Release 2000/06/06 : CIA-RDP80-00915A000100040001-9

divisions or OJCS. It has developed as a result of unclear missions, responsibilities, and authorities. It has grown as problems have been encountered that could not be adequately explained as a result of inadequate analysis and problem solving techniques. This parochial attitude and its contributing influences are evident by the absence of staff recommendations and alternatives when problems are reported during staff meetings. There is some indication here that the communications from the top down is not readily passed down at the division level at least in part because the information which is communicated down is felt not to be relevant at the individual level.

of what ?

There are no common organizational reviews with total staff participation on a regular basis. Such a review would provide an opportunity for communication in both directions on vital issues. The perception at the branch level of the front office opinion of the quality of work produced is not consistent with the front office's positive opinion.

2.2.7 PLANNING IS AIMED PRIMARILY AT RESOLUTION OF CURRENT CRISIS

All planning is aimed at the resolution of crisis. The 18th Month Plan is aimed at increasing the computer capacity and eliminating some crisis problems within the center. There may be a five year plan but it is not in evidence. All of the planning is administrative and financial at the front office level. Planning within the divisions is for the installation of the next element at hand be it the next version of software or hardware.

The lack of analysis contributes directly to poor planning. Little, if any, consistent analysis is performed to a) support or ascertain the present operational status, b) support the presentation of alternatives, proposals or solutions requiring office or division level decisions, c) support the constant configuration changes, d) measure system, sub-system (GIMS) and application performance and reliability, e) verify application design effectiveness, cost justification, and system security or f) determine system performance (scheduling, processing, priorities, job mixes, system overhead, etc.). Additionally, this lack of analysis contributes to poor system reliability as a result of liberties taken during system configuration and maintenance.

Approved For Release 2000/06/06 : CIA-RDP80-00915A000100040001-9

Approved For Release 2000/06/06 : CIA-RDP80-00915A000100040001-9

The lack of analysis results in: a) management decisions based on the most recent appeal, b) lack of high level planning or policy that coincide with the necessary support of the Agency's functions or direction, c) neglect of the technical security of systems, sub-systems, databases, and processes, d) lack of upper management understanding of or appreciation for on-line systems.

Overall planning at the policy level is not done. The planning function must evolve from finding ways out of crisis to setting a path which avoids them in the future. Problems must be examined before they get out of hand and the technology and philosophy of ADP management within the Agency must be developed ahead of the fact.

Planning is inadequate for long-term service. The analysis of needs, investigation of alternatives and general top-down planning are not staffed. This is complicated by the lack of conciseness of OJCS responsibilities in ADP as defined in [redacted] which define only a coordinating role for major areas of ADP activity.

25X1A

2.2.8 OVERALL MISSION POLICIES AND PROCEDURES ARE UNCLEAR

While there is a clear understanding of OJCS overall mission among the OJCS management team, OJCS' management and administration of Automatic Data Processing for the Agency, as presented in the Headquarter's Regulations is vague and unclear. The lack of adequate policies and procedures related thereto coupled with the misalignment of functional responsibilities, makes it difficult for any organization to develop its own mission statement and operational objectives. This results in a task orientation rather than a process orientation in management and the tasks invariably end up to be the resolution of current problems rather than looking for causes of the crisis to prevent them in the future.

Since there is a lack of policy, computer groups from other Agency components are a constant problem to OJCS. It is perceived that OJCS, in its coordinating role does not have the authority to say no. This is complicated by a lack of a consistent interface with outside organization and an ineffective ADP control officer system.

Approved For Release 2000/06/06 : CIA-RDP80-00915A000100040001-9

Approved For Release 2000/06/06 : CIA-RDP80-00915A000100040001-9

2.3 PROPOSED ACTIONS

1. Make reliability/availability a top system goal by measuring it and taking action to improve it.

2. Establish performance expectations for every organization and piece of hardware and software and review performance against these expectations. (See Appendix G).

3. Develop and implement hardware maintenance checklist procedures for each supporting functional area, i.e., on-line, batch, interactive, peripheral processing.

4. Measure and analyze system performance and plan to optimize the load sequencing and configuration for the load characteristics. Measurements include I/O by channel, CPU 'boundedness', memory use, data base use (volumes), overhead, compile rates, development/ production ratio, response time, program run times, idle or wait time, load factor on each machine (CPU) and major sub-systems, etc.

5. Set firm office-wide controls on incident cards and use the data provided. Close out every one.

6. Slow and control the rate of hardware and software change. Make fewer, larger changes and do more testing. Maintain the current system at the expense of futures if necessary.

7. Set a formal Q.A. procedure for applications going to production. Q.A. Policy and Procedures are set centrally but are executed by the production organization (not development). Set Q.A. standards and procedures to cover all deliverable OJCS computer output from Q.A.'ed products.

8. Audit applications for mis-use of resources and take action to remedy problems.

9. Simplify the complex by separating on-line and batch processing support components and establish controls, policies, responsibilities and authorities for each.

Approved For Release 2000/06/06 : CIA-RDP80-00915A000100040001-9

Approved For Release 2000/06/06 : CIA-RDP80-00915A000100040001-9

10. Establish standards for data integrity procedures.

11. Perform monthly formal reviews of key indicators for each division. A minimum set is included in Appendix G .

12. Estalish and maintain trend information to support management decisions and discussions.

13. Set up the trouble desk as an action and response operation rather than as a communicator.

14. Reduce staff meetings to 1-2 times per week and run them as productive meetings (i.e., purpose is communications - not problem solving).

15. Director address Divisions meetings at least quarterly and listen to people's concerns and answer questions.

16. Look ahead in work load and technology and cast a 5-10 year outlook and a 1-5 year plan to cover Agency needs and direction including terminals and on-line use. Plan to set policy (update [redacted] to encompass all ADP within 5 years. Establish consistent management and standards first and control later if warranted. (Must get own house in order). 25X1A

17. Develop office-wide objectives and milestones for Budget and fiscal requirements.

18. Develop office-wide objectives and milestones for Administrative requirements.

19. Assign one man to work only on technical security with the Security Officer and support him with representatives in the Divisions. Plug the holes technically or procedurally.

20. Make the ADP Control Officer system work by defining accountability for results in the control function and using MZ careerists.

21. Write office Directors and ADP Control Officers as appropriate discussing cost of services and asking review of use.

Approved For Release 2000/06/06 : CIA-RDP80-00915A000100040001-9

Approved For Release 2000/06/06 : CIA-RDP80-00915A000100040001-9

22. Establish Policy and Procedures as outlined in problem 48 and 49. Set a policy on supported software and publish and police it. (i.e., three categories: fully supported, caveat emptor, and forbidden).

23. Develop software standards and guidelines for each functional area.

24. Re-align the organization to reduce contention and permit assignment of responsibility to obtain results.

25. Review every position and incumbent and determine that: a) the job needs doing, and b) that the incumbent can do it. Re-adjust as necessary to generate more workers in key areas.

Approved For Release 2000/06/06 : CIA-RDP80-00915A000100040001-9

Approved For Release 2000/06/06 : CIA-RDP80-00915A000100040001-9

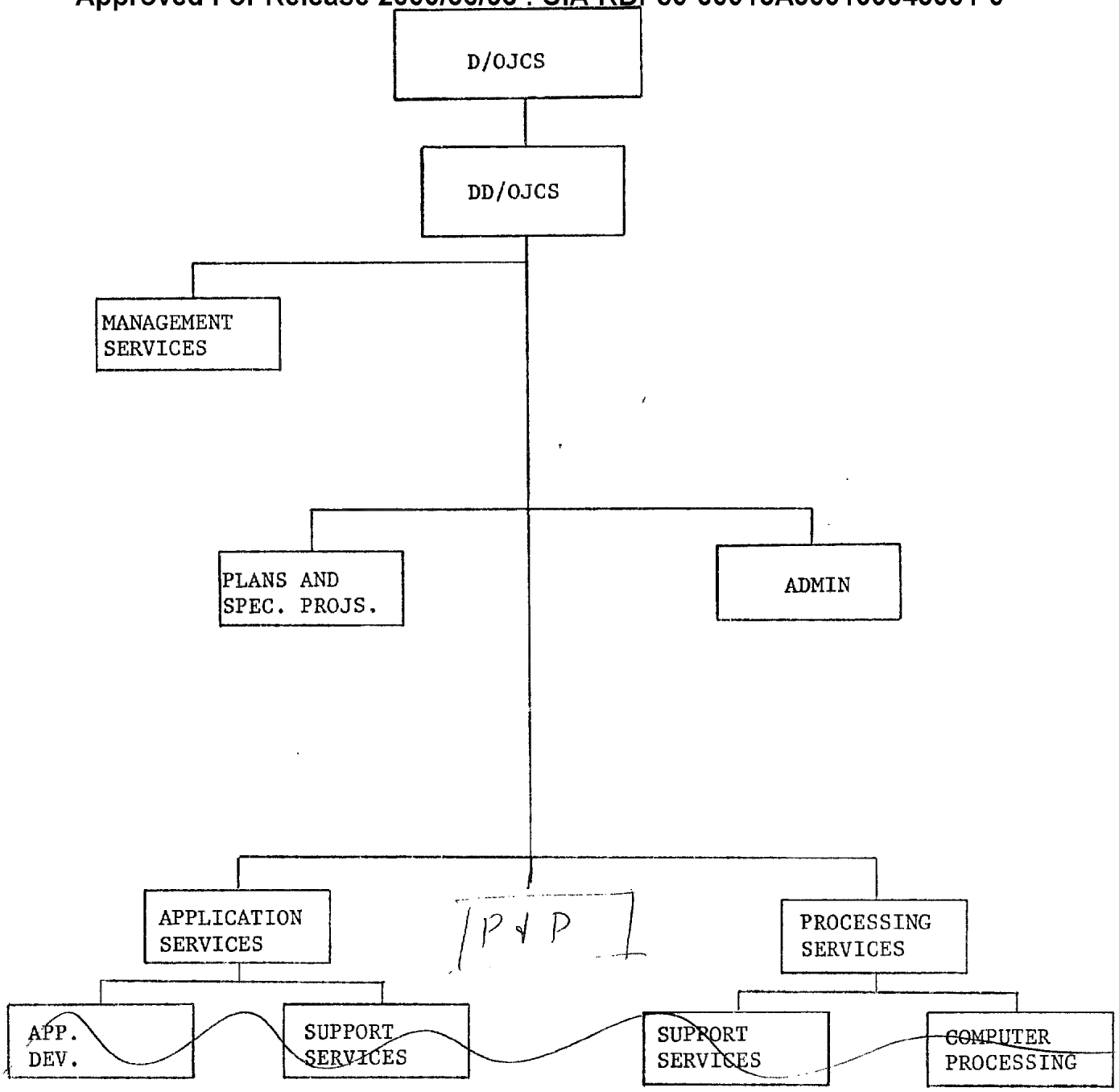

Approved For Release 2000/06/06 : CIA-RDP80-00915A000100040001-9

Approved For Release 2000/06/06 : CIA-RDP80-00915A000100040001-9

PROPOSED ORGANIZATIONAL COMPONENT'S RESPONSIBILITIES

MANAGEMENT SERVICES STAFF:

- Trend and Perf. Data
- Situation Info
- Project Status
- Pert/CPM Services
- Tech. Writing
- Standards Library
- Service Audit (PAR)

ADMINISTRATION STAFF:

- Executive Officer
- Personnel
- Logistics
- Budget & Financial Accounting
- MBO
- Financial Planning
- Career Development
- Security

PLANNING & SPECIAL PROJECTS STAFF:

- 1-5 year plan development & tracking
- 5-10 year outlook
- Supported Project Plan
- Draft Policy Development
- Skills Projection
- Technology Forecast
- Q.A. Policy
- Dev. of stand-alone system

APPLICATION SERVICES:

- Applicant Development
- Maintenance of Production Programs
- ADP Training
- Applications
- Consulting & Support
- Outside (OJCS) User Assistance

PROCESSING SERVICES:

- Production (Q.A. & Processing of Production Programs)
- Systems Software Support (Floor Systems)
- Programming System
- Consultation
- Data Conversion & EAM
- Data Base Management
- DAC Operations
- Resource Management System Measurement & Analysis (STAFF)
- Maintenance/Reliability
- Perf. measurement & Analysis

Approved For Release 2000/06/06 : CIA-RDP80-00915A000100040001-9

Approved For Release 2000/06/06 : CIA-RDP80-00915A000100040001-9

APPENDIX B

MASTER PROBLEM LIST

1. Lack of initiative in taking responsibility for action.
2. Uncontrolled input with no cost accountability.
3. No consistent Quality Control.
4. Impact analysis of applications and changes weak.
5. Dominant leader stifles initiative.
6. Staff meetings present problems - not solutions.
7. Terminal administration is inadequate. Inadequate planning for on-line systems.
8. Performance standards are not well defined in most areas.
9. Current systems support and maintenance are spurned for 'new' products.
10. Configuration control inadequate. ORG meetings are ineffective.
11. Management decisions tend to be based on the most recent appeal.
12. Division Chiefs are either dogmatic or indecisive, neither position being based on knowledge (as perceived from below).
13. System performance monitoring and analysis are below the bottom of the priority list. See 3.
14. Job mixes and priorities are not managed.
15. Managers protect their domains to the detriment of OJCS.
16. Technical security is basically ignored.
17. Production doesn't run acceptance tests - need Q.A. on production software.
18. Integrated data based may not be secure or private. See 16.

Approved For Release 2000/06/06 : CIA-RDP80-00915A000100040001-9

Approved For Release 2000/06/06 : CIA-RDP80-00915A000100040001-9

19. Credibility is poor.

20. Center reliability is inadequate, complexity exacerbate this problem.

21. Not enough resources - people, money and space. Solution ?

22. Too much change (see configuration control 10).

23. Inadequate high-level planning.

24. Many "trashy" (not cost-effective) applications (STAR). See 14.

25. Contention among managers - CYA also. See 15.

26. Fear?

27. There are some mediocre people in key positions.

28. Outside computer groups are a problem to OJCS - no policy.

29. Who's response for what? Assigned to whoever has time.

30. Incident card discipline poor.

31. Invoice billing sloppy.

32. No perceived concern for cost. vs people

33. Batch mentality in on-line operations.

34. No top-down direction - no feedback from above - communications.

35. Much cheating on technical matters.

36. D/OJCS involved in too much detail.

37. No game plan - priorities evanescent - see 23 Planning.

38. Need to take active role in minicomputers.

39. Need to take active role in ADP procurement.

40. Capacity to handle on-line load is inadequate.

Approved For Release 2000/06/06 : CIA-RDP80-00915A000100040001-9

Approved For Release 2000/06/06 : CIA-RDP80-00915A000100040001-9

41. Divisional squabbling and lack of coordination. See 15 and 25.

42. Turn-around time and response time of the center are inadequate. See 8 and 20.

43. "Fantastic" overhead to drive on-line systems leads to capacity limit. See 40.

44. Management. See 5 and 36.

45. Bureaucratic administrative load.

46. No one has the political responsibility to satisfy the Brooks Bill.

47. Complexity (see 20) does not buy the anticipated benefits in terms of flexibility, redundancy and raw capacity.

48. Procedures are weak or lacking in the following areas:

a) Maintenance
b) Configuration control.
c) Terminal requests.
d) Budget and fiscal matters.
e) Service requests.
f) Incident report handling.
g) Problem analysis.
h) Production handling.
i) Project management.
j) Resource usage accountability.
k) Project registry.

49. Policy definitions are weak or lacking in the following areas:

a) Agency ADP control.
b) New applications.
c) Centralized vs. decentralized control.
d) Cost accountability for resource utilization.
e) Control of input.

50. Trouble desk is ineffective.

51. Lack of use of available management control of OJCS facilities, user input and product output.

52. Lack of scientific organized approach to problem analysis.

Approved For Release 2000/06/06 : CIA-RDP80-00915A000100040001-9

Approved For Release 2000/06/06 : CIA-RDP80-00915A000100040001-9

53. Management of people is based more on personnel relationships than objective management and career development.

54. There is no common philosophy of management of people in the office.

55. ADP control officer system is ineffective.

56. 24 hour DAC needed.

57. Service and control roles are in conflict.

58. OJCS needs a consistent interface to each outside organization.

59. Non-prime time support of O.D. inadequate.

60. GC047 is running out of capacity. No plans.

61. Public relations role is weak.

62. Software maintenance role is not appreciated.

63. Training should be consistent with ADP policy.

64. Operational objective not documented.

65. Logistical support from front office weak.

Approved For Release 2000/06/06 : CIA-RDP80-00915A000100040001-9

Approved For Release 2000/06/06 : CIA-RDP80-00915A000100040001-9

APPENDIX C

AVAILABLE STATISTIC REPORTS

A. Project Activity Reports generated by RMB/OD:

1. Weekly Audit report from RMB use only.
2. Monthly userid activity by submitter code (entire file).
3. Monthly userid activity by submitter code for O/DCI.
4. Monthly userid activity by submitter code for OMS.
5. Monthly userid activity by customer code (entire file).
6. Monthly userid activity by customer code for OSI.
7. Accounting of elapsed/cpu time and job counts by system.
8. One page report for each batch system with activity by job priority.
9. One page report for the 67-1 system with activity within the three time shifts.
10. Overhead hours report for each system showing scheduled and unscheduled maintenance, idle time, power off time, hardware problem time, etc.
11. Activity report of each system by day and hour.
12. Short/Long job report showing cpu times and job counts for 65s, 158s, 168 and 195.
13. Listing of all on-line and dedicated devices.
14. A group of reports showing:
    a. The range of jobs costed,
    b. summary of no-cost jobs by system,
    c. summary of costed jobs by system, etc.

Approved For Release 2000/06/06 : CIA-RDP80-00915A000100040001-9

Approved For Release 2000/06/06 : CIA-RDP80-00915A000100040001-9

15. A group of reports showing:

    a. A report of detail resource breakout showing dollar amounts for costed and no-cost projects (entire file).

    b. Report of detail resources breakout showing dollar amounts for only costed records.

    c. Same as above except for only no-cost records.

    d. One page report showing detail breakout of resources and dollar amounts for only CRS projects.

    e. A report showing detail breakout of resources and dollar amounts by project of only CRS projects.

    f. Same as above except for only OD&E projects.

    g. Same as above except for only ISPB projects.

16. A report showing a detail breakout of resources and dollar amounts for only the Office of Commo, by project and sub-project.

17. A report showing the errors and hours of processing of the EAM area.

18. A report showing a summary page of the following: manpower hours by pay period - total of CPU hours/ elapsed hours, data preparation costs, and processing costs, and amounts for emulation processing.

19. A one page report of activity by each office showing the office manpower, 360/05, 360/CP-VM and other charges for the month, plus the total charges for the year to date with a percentage of the total in each case.

20. Same as above except with activity by project within office.

21. A detailed report of activity within each billable project for each office, with Directorate and Agency totals.

Approved For Release 2000/06/06 : CIA-RDP80-00915A000100040001-9

Approved For Release 2000/06/06 : CIA-RDP80-00915A000100040001-9

22. Same as above, except non-billable.

23. One page report of over all total of both billable and non-billable activity.

24. A credit report by office and project of the dollar amounts that were added and subtracted from the various projects and the reasons for the adjustments.

25. A report showing manpower and machine costs for each fiscal month with one record for each customer code, project number, sub-project, CPUID, submitter code (type of activity, i.e., 'P' production, 'M' maintenance, 'D' development) and billable code.

26. A report showing a breakout by vendor and on-line systems of the stability of the computer centers.

27. A report showing the scheduled up time, down time, (Hardware-Software-Application) for a group of CRS on-line applications.

B. RMB Generated SMF Reports

DAILY

1. Daily Computer Center Listing.
2. Daily Master File Listing.
3. Daily Diagnostic Listing.
4. Daily ASP Summary Listing.
5. Daily A-Priority Listing (2 versions).
6. Daily Tape Error Status by Volume Report (2 versions).
7. Daily VM Report.
8. Daily CP Report.
9. Daily On-line Job Report.
10. Daily System Productivity Reports.
11. Daily Special Use Reports Based on Center Listing.

WEEKLY

12. Weekly Computer Center Listing - Generate User Data Set.
13. Weekly Audit Trail Report (visit to users).
14. Weekly Disk Activity Reports (2 versions).
15. Weekly Disk Activity Report (Prod. Br. Only).
16. Weekly Tape Abend Report.
17. Weekly System Catalog Listing.
18. Weekly Open Incident Report.

Approved For Release 2000/06/06 : CIA-RDP80-00915A000100040001-9

Approved For Release 2000/06/06 : CIA-RDP80-00915A000100040001-9

MONTHLY

19. Monthly Simjob Usage Report.
20. Monthly ASP Batch Statistics.
21. Monthly CP PSPACE Reports.
22. Monthly VM MDISK Reports.
23. Monthly GIM Statistics Report.
24. Monthly Par Report (several edit and audit reports prior to Par Report).
25. Monthly Inactive Share Data Set Report.
26. Monthly Stability Index Report.
27. Monthly On-line Job Availability Report.
28. Monthly Over-allocated Share Data Set Report.

Approved For Release 2000/06/06 : CIA-RDP80-00915A000100040001-9

Approved For Release 2000/06/06 : CIA-RDP80-00915A000100040001-9

APPENDIX D

INCIDENT CARD

NO.

HARDWARE INCIDENT REPORT

FORM 4-74 3451 USE PREV. EDITIONS

DATE (DDMMYY) TIME	AFFECTED SYS NO/OS VERS.	FAILING UNIT/SER. NO.		SEREP
				CORE IMAGE
REPORTED BY:	AFFECTED SYS SER. NO.	CPU MTR READINGS		STANDALONE DUMP
				ASP DUMP
RERUN TIME	RERUN JOB NO.	LOCATION/NAME		IPL (Y or N)
			PHONE NO.	

PROBLEM ENVIRONMENT/DESCRIPTION

REPORTED BY

SEVERITY CODE	PERSONS NOTIFIED	PROBABLE CAUSES	SUPERVISOR
DISATROUS (4)	ORG/NAME	HARDWARE	
CRITICAL (3)		SOFTWARE	
SERIOUS (2)	ORG/NAME	OTHER	DATE (DDMMYY) AND TIME VENDOR NOTIFIED
MINOR (1)		P.M.	
SCHEDULED (0)			

DATE (DDMMYY) TIME COMPLETE | MTR READINGS: CPU

ACTION TAKEN AND FINDINGS

REPORTED BY

INCIDENT STATUS	FOLLOW-UP TO	TIME TO REPAIR
CLOSED		
OPEN	RQST'D. BY (NAME)	CREDIT ☐ RERUN ☐ RENTAL

FOLLOW-UP ACTION TAKEN

REPORTED BY

Approved For Release 2000/06/06 : CIA-RDP80-00915A000100040001-9

Approved For Release 2000/06/06 : CIA-RDP80-00915A000100040001-9

APPENDIX E

AVAILABLE SYSTEM PERFORMANCE CHARTS

Approved For Release 2000/06/06 : CIA-RDP80-00915A000100040001-9

ASP PERFORMANCE

Approved For Release 2000/06/06 : CIA-RDP80-00915A000100040001-9

Month	MTTR	MTBF	IPLs										Availability
			A	B	C	D	M	P	S	T	X	Total	
Jan. 76	.76	52							4		5	9	.98
Feb 76	.79	56			1	1			3		1	6	.98
March 76													
April 76													
May 76													
June 76													
July 76													
Aug 76													
Sept. 76													
Oct 76													
Nov 76													
Dec. 76													
Jan 77													
Feb. 77													
March 77													
April 77													
May 77													
June 77													
July 77													
Aug 77													
Sept. 77													
Oct 77													
Nov. 77													
Dec 77													

A = Ampex
B = IBM
C = Calcomp
D = CDC
M = Memorex
P = Power
S = Software
T = Comten
X = Other

Approved For Release 2000/06/06 : CIA-RDP80-00915A000100040001-9

ASP PERFORMANCE

Approved For Release 2000/06/06 : CIA-RDP80-00915A000100040001-9

Month	MTTR	MTBF	IPLs										Availability
			A	B	C	D	M	P	S	T	X	Total	
Jan. 74	.61	28	0	6	2	6	0	0	6	1	4	25	.97
Feb. 74	.64	29	0	5	0	0	0	0	6	3	0	14	.97
March 74	.63	29	0	2	0	1	3	0	6	3	5	20	.97
April 74	.63	33	0	2	1	2	2	0	1	2	0	10	.98
May 74	.72	34	0	2	0	2	1	0	9	0	1	15	.97
June 74	.80	37		4		1	1		5	2		13	.97
July 74	.80	38		5	3	1			5		1	15	.97
Aug. 74	.78	39		2	3	1			4	1	4	15	.98
Sept. 74	.74	39		5	1	4	2		4	3	9	28	.98
Oct. 74	.78	39		2	2	1			2	4	3	14	.98
Nov. 74	.85	37		6		21	2		7		5	41	.97
Dec. 74	.95	38		3	2	5			1		2	13	.97
Jan. 75	.90	40		1	1		1		5	4	3	15	.97
Feb. 75	.86	40			1				10		6	17	.97
March 75	.97	41		3	5	1			4		2	15	.97
April 75	.98	39		3	1	7			4	2	2	19	.97
May 75	.92	39		1					2	11	2	16	.97
June 75	.84	38		1	1		1		10	5	2	20	.97
July 75	.86	39		1	3	2			7			13	.97
Aug. 75	.87	38		1	6	2			5		3	17	.97
Sept. 75	.90	40		2		1			11		1	15	.97
Oct. 75	.90	42							4		2	6	.97
Nov. 75	.75	49				1			9		1	11	.98
Dec. 75	.71	50		1	1				8			10	.98

A = Ampex
B = IBM
C = Calcomp
D = CDC
M = Memorex
P = Power
S = Software
T = Comten
X = Other

Approved For Release 2000/06/06 : CIA-RDP80-00915A000100040001-9

CP/CMS SYSTEM PERFORMANCE

Approved For Release 2000/06/06 : CIA-RDP80-00915A000100040001-9

Month	MTTR	MTBF	IPLs										Availability
			A	B	C	D	M	P	S	T	X	Total	
Jan. 76	1.25	47		1	2				2		2	7	.97
Feb. 76	1.31	48		5	1				1			7	.97
March 76													
April 76													
May 76													
June 76													
July 76													
Aug. 76													
Sept. 76													
Oct. 76													
Nov. 76													
Dec. 76													
Jan 77													
Feb. 77													
March 77													
April 77													
May 77													
June 77													
July 77													
Aug 77													
Sept. 77													
Oct 77													
Nov. 77													
Dec 77													

A = Ampex
B = IBM
C = Calcomp
D = CDC
M = Memorex
P = Power
S = Software
T = Comten
X = Other

Approved For Release 2000/06/06 : CIA-RDP80-00915A000100040001-9

Approved For Release 2000/06/06 : CIA-RDP80-00915A000100040001-9

Month	MTTR	MTBF	IPLs										Availability
			A	B	C	D	M	P	S	T	X	Total	
Jan. 74	.88	43	0	0	11	0	0	0	9	0	0	20	.96
Feb. 74	.93	43	0	6	4	0	0	0	3	5	1	19	.97
March 74	.96	45	0	5	1	0	0	0	6	2	1	15	.97
April 74	.94	47	0	4	5	0	1	0	4	4	1	19	.97
May 74	.92	47	0	5	0	0	0	0	1	6	2	14	.97
June 74	.91	44	0	6	0	0	2	0	6	2	4	20	.97
July 74	.81	50		2	2				1		1	6	.98
Aug. 74	.83	51		3	7					2		12	.98
Sept. 74	.77	56							1			1	.98
Oct. 74	.79	53		4	5				1	3		13	.98
Nov. 74	.79	55		1	1						3	5	.98
Dec. 74	.76	58		1	1		1				2	5	.98
Jan. 75	.90	65		4					2		1	7	.98
Feb. 75	.88	68		2	3				1		3	9	.98
March 75	.86	73		1	4					1	1	7	.98
April 75	.92	76		3	2				7	1	2	15	.98
May 75	.94	66			2					25	5	32	.98
June 75	.99	65		11	3		1		2	7	1	25	.98
July 75	1.03	60		7						2	4	13	.98
Aug. 75	1.02	65			1				1			2	.98
Sept. 75	1.01	60		1	3				1	1	4	10	.98
Oct. 75	1.17	56		5	1				1	11	2	20	.98
Nov. 75	1.18	49		9	8				3	3	4	27	.97
Dec. 75	1.35	47		7					1	1	2	11	.97

A = Ampex
B = IBM
C = Calcomp
D = CDC
M = Memorex
P = Power
S = Software
T = Comten
X = Other

Approved For Release 2000/06/06 : CIA-RDP80-00915A000100040001-9

(IBM Hardware Only)

Approved For Release 2000/06/06 : CIA-RDP80-00915A000100040001-9

MONTH	UP TIME	IPLS	MTTR	MTBF	EFFECTIVENESS	EFF 90	AVAILABILITY
ct. 74	664	15	1.06	44	.97	.96	.96
Nov. 74	627	9	1.21	47	.97	.96	.96
ec. 74	566	8	1.22	52	.97	.96	.96
Jan. 75	675	6	1.30	56	.97	.97	.97
Feb. 75	596	12	1.24	57	.97	.98	.97
ar. 75	654	14	1.23	53	.97	.98	.97
Apr. 75	643	13	1.22	51	.97	.98	.96
ay 75	682	4	1.25	56	.97	.98	.97
Jun. 75	638	9	1.33	57	.97	.98	.97
July 75	667	14	1.28	58	.97	.98	.97
ug. 75	662	8	1.23	61	.98	.97	.97
Sep. 75	599	19	1.21	59	.97	.98	.96
ct. 75	664	10	1.10	61	.98	.98	.97
ov. 75	616	5	.97	63	.98	.98	.97
Dec. 75	715	7	.98	65	.98	.98	.97
an. 76	704	2	1.06	67	.98	.98	.96
Feb. 76	674	5	1.12	72	.98	.98	.96
ar. 76							
pr. 76							
May 76							
un. 76							
July 76							
ug. 76							
ep. 76							
Oct. 76							

Approved For Release 2000/06/06 : CIA-RDP80-00915A000100040001-9

Approved For Release 2000/06/06 : CIA-RDP80-00915A000100040001-9

MAP PERFORMANCE

Month	GIM Software Only		Total System		IPLs of the MAP Support CPU										Effectiveness
	MTTR	MTBF	MTTR	MTBF	B	C	M	A	T	P	D	S	X	Total	
July 75	0.5	33.0	0.8	11.2	2						7	4	2	15	.92
Aug 75	0.5	33.3	0.9	11.6	1	5					3	1	2	12	.92
Sep 75	0.5	34.3	0.9	11.6		3	3				2		1	9	.92
Oct 75	0.6	35.5	1.0	11.9	10				2		5	1	8	26	.91
Nov 75	1.0	37.6	1.3	12.5	2						3		1	6	.90
Dec 75	0.6	35.9	1.0	12.3	1	2					2		2	7	.91
Jan 76	0.6	35.7	1.0	11.8	3								2	5	.91
Feb 76	0.5	36.2	1.0	11.9	2	1						2		5	.91
Mar 76															
Apr 76															
May 76															
June 76															
July 76															
Aug 76															
Sep 76															
Oct 76															
Nov 76															
Dec 76															

A = Ampex
B = IBM
C = Calcomp
D = CDC
P = Power
M = Memorex
S = Software
T = Comten
X = Other

Approved For Release 2000/06/06 : CIA-RDP80-00915A000100040001-9

Approved For Release 2000/06/06 : CIA-RDP80-00915A000100040001-9

158-1 PERFORMANCE

MONTH	UP TIME [HRS]	IBM IPLs	IBM MTTR	IBM MTBF	I P Ls												Overall MTTR	Overall MTBF	EFF.	EFF 90	Avail-abili
					A	B	C	D	M	P	S	T	X			TOTAL					
Nov 75	551	3	1.65	430		3		10			4	1	2			20	1.15	63	.99	.99	.98
Dec 75	555	1	1.63	436		1					3		2			6	1.12	64	.99	.99	.98
Jan 76	589	2	1.61	269		2	1	5			4	1	2			15	1.19	39	.99	.99	.97
Feb 76	552	0	1.63	286				2			5		1			8	1.14	39	.99	.99	.97
Mar 76																					
Apr 76																					
May 76																					
Jun 76																					
Jul 76																					
Aug 76																					
Sep 76																					
Oct 76																					
Nov 76																					
Dec 76																					

Approved For Release 2000/06/06 : CIA-RDP80-00915A000100040001-9

Approved For Release 2000/06/06 : CIA-RDP80-00915A000100040001-9

PERFORMANCE

MONTH	UP TIME [HRS]	IBM IPLs	IBM MTTR	IBM MTBF	I P Ls											TOTAL	Overall MTTR	Overall MTBF	EFF.	EFF 90	Avail-abilit
					A	B	C	D	M	P	S	T	X								
May 74	351	6	2.86	56		6		2			4	4	2			18	1.35	20	.95	.95	.97
June 74	339	0	2.86	115				4			6	3	1			14	1.02	22	.97	.97	.97
July 74	500	4	2.20	119		4		3								7	.98	30	.98	.98	.98
Aug 74	462	2	1.95	138		2		1			2	1				6	.96	36	.98	.99	.98
Sept 74	428	2	2.14	149		2					1	1				4	1.03	41	.98	.99	.98
Oct 74	448	1	2.05	169		1		5				3				9	1.08	42	.98	.99	.98
Nov 74	450	2	2.35	175		2							1			3	1.18	47	.99	.99	.98
Dec 74	426	0	2.35	200												0	1.18	54	.98	.99	.98
Jan 75	475	0	2.35	228												0	1.18	62	.98	.99	.98
Feb 75	453	1	2.27	241		1	1	1					2			5	1.27	64	.99	.99	.98
March 75	526	3	2.35	231		3					1					4	1.32	67	.98	.99	.98
April 75	505	0	2.35	255			2				1	2	3			8	1.27	67	.99	.99	.98
May 75	478	1	2.18	348		1		1			1	8	2			13	1.12	72	.99	.99	.99
June 75	456	1	2.15	351		1		9			1	6	1			18	1.21	75	.99	.99	.98
July 75	462	2	2.41	428		2		3				1	2			8	1.27	81	.99	.99	.98
Aug 75	511	3	2.46	352		3		16			2	1				22	1.22	59	.99	.99	.98
Sept 75	505	2	2.22	466		2	3	5			1	1	1			13	1.14	72	.99	.99	.98
Oct 75	580	4	2.04	423		4	1	11			2	3	4			25	1.19	68	.99	.99	.98

Approved For Release 2000/06/06 : CIA-RDP80-00915A000100040001-9

Approved For Release 2000/06/06 : CIA-RDP80-00915A000100040001-9

MONTH	UP TIME [HRS]	IBM IPLs	IBM MTTR	IBM MTBF	I P Ls										TOTAL	Overall MTTR	Overall MTBF	EFF.	EFF 90	Avail-abilit
					A	B	C	D	M	P	S	T	X							
Jun 75	399	0	1.91	120							14	1	4		19	.83	22	.98	.99	.98
Jul 75	435	4	2.16	118		4		3					2		9	.92	24	.98	.98	.98
Aug 75	510	3	2.18	124		3		1			11		4		19	1.11	25	.98	.98	.97
Sep 75	501	4	2.09	124		5	2				1	2			10	1.30	27	.98	.98	.97
Oct 75	529	0	2.09	142				12			4	10	2		28	1.36	25	.98	.99	.97
Nov 75	462	17	1.95	100		17	1	2			3	2			25	1.39	25	.98	.97	.96
Dec 75	517	1	1.81	112		1		3			1		8		13	1.31	25	.98	.98	.96
Jan 76	384	0	1.91	123							3				3	1.34	26	.98	.97	.96
Feb 76	460	1	1.99	141		1		4			3		1		9	1.40	28	.98	.99	.96
Mar 76																				
Apr 76																				
May 76																				
Jun 76																				
Jul 76																				
Aug 76																				
Sep 76																				
Oct 76																				
Nov 76																				

Approved For Release 2000/06/06 : CIA-RDP80-00915A000100040001-9

Approved For Release 2000/06/06 : CIA-RDP80-00915A000100040001-9

R - 158 PERFORMANCE

MONTH	UP TIME [HRS]	IBM IPLs	IBM MTTR	IBM MTBF	IPLs												Overall MTTR	Overall MTBF	EFF.	EFF 90	Avail-ability
					A	B	C	D	M	P	S	T	X			TOTAL					
Aug 75	551	0	1.28	189							2		1			3	1.02	83	.99	.99	.99
Sep 75	559	0	1.21	217							4		6			10	1.02	82	.99	.99	.99
Oct 75	560	0	1.30	241							3		6			9	1.02	79	.99	1.00	.99
Nov 75	524	2	1.07	243		2					3		1			6	.97	79	.99	.99	.99
Dec 75	476	0	.95	347							2					2	.94	89	.99	.99	.99
Jan 76	569	2	1.06	386		2										2	.90	98	.99	.99	.99
Feb 76	504	1	1.24	442		1										1	.92	105	.99	.99	.99
Mar 76																					
Apr 76																					
May 76																					
Jun 76																					
Jul 76																					
Aug 76																					
Sep 76																					
Oct 76																					
Nov 76																					
Dec 76																					
Jan 77																					

Approved For Release 2000/06/06 : CIA-RDP80-00915A000100040001-9

Approved For Release 2000/06/06 : CIA-RDP80-00915A000100040001-9

MONTH	UP TIME [HRS]	IBM IPLs	IBM MTTR	IBM MTBF	IPLs A	B	C	D	M	P	S	T	X			TOTAL	Overall MTTR	Overall MTBF	EFF.	EFF 90	Avail-abili
May 74																					
June 74	509	1	.33	509		1					4		1			6	1.35	102	.99	.99	.99
July 74	472	1	.70	482		1					2		4			7	.99	88	.99	.99	.99
Aug. 74	495	4	1.20	246		4					3		2			9	.92	70	.99	.99	.99
Sept. 74	493	4	1.43	197		3							5			8	.92	66	.99	.99	.99
Oct. 74	575	3	1.20	196		3					1		2			6	.86	71	.99	.99	.99
Nov. 74	484	2	1.54	202		2					1		3			6	.96	74	.99	.98	.99
Dec. 74	440	8	1.47	151		8					2		1			11	.99	65	.99	.98	.98
Jan. 75	583	4	1.31	150		4					1		4			9	1.03	65	.99	.98	.98
Feb. 75	433	3	1.22	150		3							2			5	1.01	67	.99	.99	.98
March 75	549	3	1.32	153		3					1		3			7	1.09	68	.99	.99	.98
April 75	586	1	1.31	165		1					2		3			6	1.08	70	.99	.99	.98
May 75	661	1	1.31	170		1					1		3			5	1.06	73	.99	.99	.98
June 75	582	2	1.34	178		2					1		2			5	1.07	76	.99	.99	.98
July 75	532	3	1.30	169		3					2		2			7	1.04	77	.99	.99	.98

Approved For Release 2000/06/06 : CIA-RDP80-00915A000100040001-9

Approved For Release 2000/06/06 : CIA-RDP80-00915A000100040001-9

B-135 PERFORMANCE

MONTH	UP TIME [HRS]	IBM IPLs	IBM MTTR	IBM MTBF	I P Ls											TOTAL	Overall MTTR	Overall MTBF	EFF.	EFF 90	Avail-abilit
					A	B	C	D	M	P	S	T	X								
Nov 75	537	1	.79	.252		1							2			3	.69	74	.99	.99	.99
Dec 75	429	0	.88	316									1			1	.71	81	.99	.99	.99
Jan 76	476	0	.65	485							1					1	.68	102	.99	.99	.99
Feb 76	493	2	.95	455		2										2	.72	116	.99	.99	.99
Mar 76																					
Apr 76																					
May 76																					
Jun 76																					
Jul 76																					
Aug 76																					
Sep 76																					
Oct 76																					
Nov 76																					
Dec 76																					

Approved For Release 2000/06/06 : CIA-RDP80-00915A000100040001-9

Approved For Release 2000/06/06 : CIA-RDP80-00915A000100040001-9

MONTH	UP TIME [HRS]	IBM IPLs	IBM MTTR	IBM MTBF	I P Ls											Overall MTTR	Overall MTBF	EFF.	EFF 90	Avail-abilit
					A	B	C	D	M	P	S	T	X		TOTAL					
May 74																				
June 74	454	1	.33	454		1					2		3		6	.40	91	.99	.99	.99
July 74	453	5	1.06	149		5					5		3		13	.60	53	.99	.99	.99
Aug. 74	469	0	1.06	229							1		2		3	.55	66	.99	.99	.99
Sept. 74	428	2	.98	226		3					1		4		8	.66	64	.99	.99	.99
Oct. 74	481	1	1.01	254		1					4		2		7	.69	65	.99	.99	.99
Nov. 74	345	3	1.22	219		3					3		1		7	.81	63	.99	.99	.99
Dec. 74	301	3	1.06	195		3					1		1		5	.77	61	.99	.99	.99
Jan. 75	332	6	1.10	155		6					4		4		14	.76	53	.99	.98	.99
Feb. 75	402	2	1.06	159		2					2		5		9	.77	52	.99	.99	.99
March 75	502	2	.99	167		2					1		2		5	.76	55	.99	.99	.99
April 75	555	0	.99	189							4		3		7	.73	57	.99	.99	.99
May 75	597	3	.97	181		3					3		6		12	.71	56	.99	.99	.99
June 75	595	2	1.03	190		2					1		1		4	.73	60	.99	.99	.99
July 75	333	3	.93	198		3							1		4	.73	65	.99	.99	.99
Aug. 75	444	0	.93	198							3				3	.72	64	.99	.99	.99
Sept. 75	432	0	.94	214									4		4	.78	66	.99	.99	.99
Oct. 75	495	0	.93	223							1		4		5	.77	68	.99	1.00	.99

Approved For Release 2000/06/06 : CIA-RDP80-00915A000100040001-9

PERFORMANCE/OBJECTIVES

Approved For Release 2000/06/06 : CIA-RDP80-00915A000100040001-9

	ASP MTBF	CP MTBF	ASP MTTR	CP MTTR	ASP AVAIL-	CP AVAIL-	TART	COMPLETE %	COMPOSITE PERFORMANCE RATING
GOAL	48.0	96.0	0.5	0.5	.99	.99	1.0	1.0	
COEFFICIENT	2.5	2.0	0.3	0.4	0.5	1.0	0.6	0.2	
FORMULA	$\frac{N}{G}$	$\frac{N}{G}$	$\frac{4-N}{4-G}$	$\frac{4-N}{4-G}$	$\frac{N}{G}$	$\frac{N}{G}$	$\frac{8-N}{8-G}$	$\frac{N}{G}$	
Jan 75	40	65	.90	.90	.97	.98	1.1	.76	.84
Feb 75	40	68	.86	.88	.97	.98	0.8	.83	.85
March 75	41	73	.97	.86	.97	.98	1.1	.78	.87
April 75	39	76	.98	.92	.97	.98	1.0	.85	.86
May 75	39	66	.92	.94	.97	.98	1.3	.82	.83
June 75	38	65	.84	.99	.97	.98			
July 75	39	60	.86	1.03	.97	.98			
Aug 75	38	65	.87	1.02	.97	.98			
Sept 75	40	60	.90	1.01	.97	.98			
Oct. 75	42	56	.90	1.17	.97	.98			
Nov. 75	49	49	.75	1.18	.98	.97			
Dec 75	50	47	.71	1.35	.98	.97			
Jan 76	52	47	.76	1.25	.98	.97			
Feb 76	56	48	.79	1.31	.98	.97			

N = Actual performance of the 8 measurements
G = Performance level goal of the 8 measurements
C = Coefficient or weight given to each of the 8 measurements

Approved For Release 2000/06/06 : CIA-RDP80-00915A000100040001-9

Approved For Release 2000/06/06 : CIA-RDP80-00915A000100040001-9

Month	MTTR	MTBF	IPLs										Availability
			A	B	C	D	M	P	S	T	X	Total	
Jan. 76	.82	106			1				1		1	3	.99
Feb. 76	.82	106										0	.99
March 76													
April 76													
May 76													
June 76													
July 76													
Aug. 76													
Sept. 76													
Oct. 76													
Nov. 76													
Dec. 76													
Jan. 77													
Feb. 77													
March 77													
April 77													
May 77													
June 77													
July 77													
Aug. 77													
Sept. 77													
Oct. 77													
Nov. 77													
Dec. 77													

A = Ampex
B = IBM
C = Calcomp
D = CDC
M = Memorex
P = Power
S = Software
T = Comten
X = Other

Approved For Release 2000/06/06 : CIA-RDP80-00915A000100040001-9

Approved For Release 2000/06/06 : CIA-RDP80-00915A000100040001-9

65-1 PERFORMANCE

Month	MTTR	MTBF	IPLs										Availability
			A	B	C	D	M	P	S	T	X	Total	
Jan 74													
Feb. 74													
March 74													
April 74													
May 74													
June 74													
July 74													
Aug. 74													
Sept. 74													
Oct. 74													
Nov. 74													
Dec. 74													
Jan 75													
Feb. 75													
March 75													
April 75													
May 75													
June 75	.39	127		1	1		1		10	5	2	20	.99
July 75	.49	92		1	4	1			7	2		15	.99
Aug. 75	.72	75		3	5	4			6			18	.99
Sept. 75	.68	72		2	3	2			3		2	12	.99
Oct. 75	.70	72		1	1	1			6		1	10	.99
Nov. 75	.74	75		1					4	1		6	.99
Dec. 75	.82	71		5		1			1	1	2	10	.99

A = Ampex
B = IBM
C = Calcomp
D = CDC
M = Memorex
P = Power
S = Software
T = Comten
X = Other

Approved For Release 2000/06/06 : CIA-RDP80-00915A000100040001-9

Approved For Release 2000/06/06 : CIA-RDP80-00915A000100040001-9

Month	MTTR	MTBF	IPLs										Availability
			A	B	C	D	M	P	S	T	X	Total	
Jan. 76	1.23	45		3	1	1					2	7	.97
Feb. 76	1.21	45		2	2				1			5	.97
March 76													
April 76													
May 76													
June 76													
July 76													
Aug. 76													
Sept. 76													
Oct. 76													
Nov. 76													
Dec. 76													
Jan. 77													
Feb. 77													
March 77													
April 77													
May 77													
June 77													
July 77													
Aug. 77													
Sept. 77													
Oct. 77													
Nov. 77													
Dec. 77													

A = Ampex
B = IBM
C = Calcomp
D = CDC
M = Memorex
P = Power
S = Software
T = Comten
X = Other

Approved For Release 2000/06/06 : CIA-RDP80-00915A000100040001-9

65-2 PERFORMANCE

Approved For Release 2000/06/06 : CIA-RDP80-00915A000100040001-9

	MTTR	MTBF	IPLs										Availability
			A	B	C	D	M	P	S	T	X	Total	
[illegible] 74													
[illegible] 74													
[illegible] 74													
[illegible] 74													
[illegible] 74	1.26	64		2		4	1		1		3	11	.98
[illegible] 74	1.15	53				9	3		2			14	.97
[illegible] 74	.95	51		4	3	4	1		1		2	15	.98
[illegible] 74	.92	53		2	1	2	3		1	2	2	13	.98
[illegible] 74	1.00	48			2	3	2		3	2	9	21	.97
[illegible] 74	.99	51		2		3				3	2	10	.98
[illegible] 74	1.01	55		1	1	1			1		3	7	.98
[illegible] 74	1.06	58		1	3	1			1		2	8	.98
[illegible] 75	1.02	62		1					2		3	6	.98
[illegible] 75	1.09	65		1	1	2					1	5	.98
[illegible]rch 75	1.07	70			2						1	3	.98
[illegible]ril 75	1.01	56		1	6	5	9			14	4	39	.98
[illegible] 75	.95	55		1	1		1		2	9	2	16	.98
[illegible] 75	.91	52		1	1	5	1		2	10	4	24	.98
[illegible] 75	.93	51		2		10			5		2	19	.98
[illegible] 75	.98	50		1	7	3			1	1	1	14	.98
[illegible] 75	.94	53			3	2	3				2	10	.98
[illegible] 75	1.15	45		12	2	9			1	5	9	38	.97
[illegible] 75	1.20	45		2		3					1	6	.97
[illegible] 75	1.20	45		1	3	2					2	8	.97

A = Ampex
B = IBM
C = Calcomp
D = CDC
M = Memorex
P = Power
S = Software
T = Comten
X = Other

Approved For Release 2000/06/06 : CIA-RDP80-00915A000100040001-9

Approved For Release 2000/06/06 : CIA-RDP80-00915A000100040001-9

IBX-1 PERFORMANCE

MONTH	UP TIME [HRS]	IBM IPLs	IBM MTTR	IBM MTBF	I P Ls												Overall MTTR	Overall MTBF	EFF.	EFF 90	Avail-abilit
					A	B	C	D	M	P	S	T	X			TOTAL					
Jan 76	502	7	1.51	72		7		8			6	1	7			29	1.00	17	.97	.97	.95
Feb 76	497	1	2.00	125		1		3			2		5			11	1.21	25	.98	.98	.96
Mar 76																					
Apr 76																					
May 76																					
Jun 76																					
Jul 76																					
Aug 76																					
Sep 76																					
Oct 76																					
Nov 76																					
Dec 76																					

Approved For Release 2000/06/06 : CIA-RDP80-00915A000100040001-9

Approved For Release 2000/06/06 : CIA-RDP80-00915A000100040001-9

APPENDIX F

GC-03 COMPUTER CENTER DIAGRAMS

1. Processor Service Schematic
2. Data Access Schematics and Chart

Approved For Release 2000/06/06 : CIA-RDP80-00915A000100040001-9

Approved For Release 2000/06/06 : CIA-RDP80-00915A000100040001-9

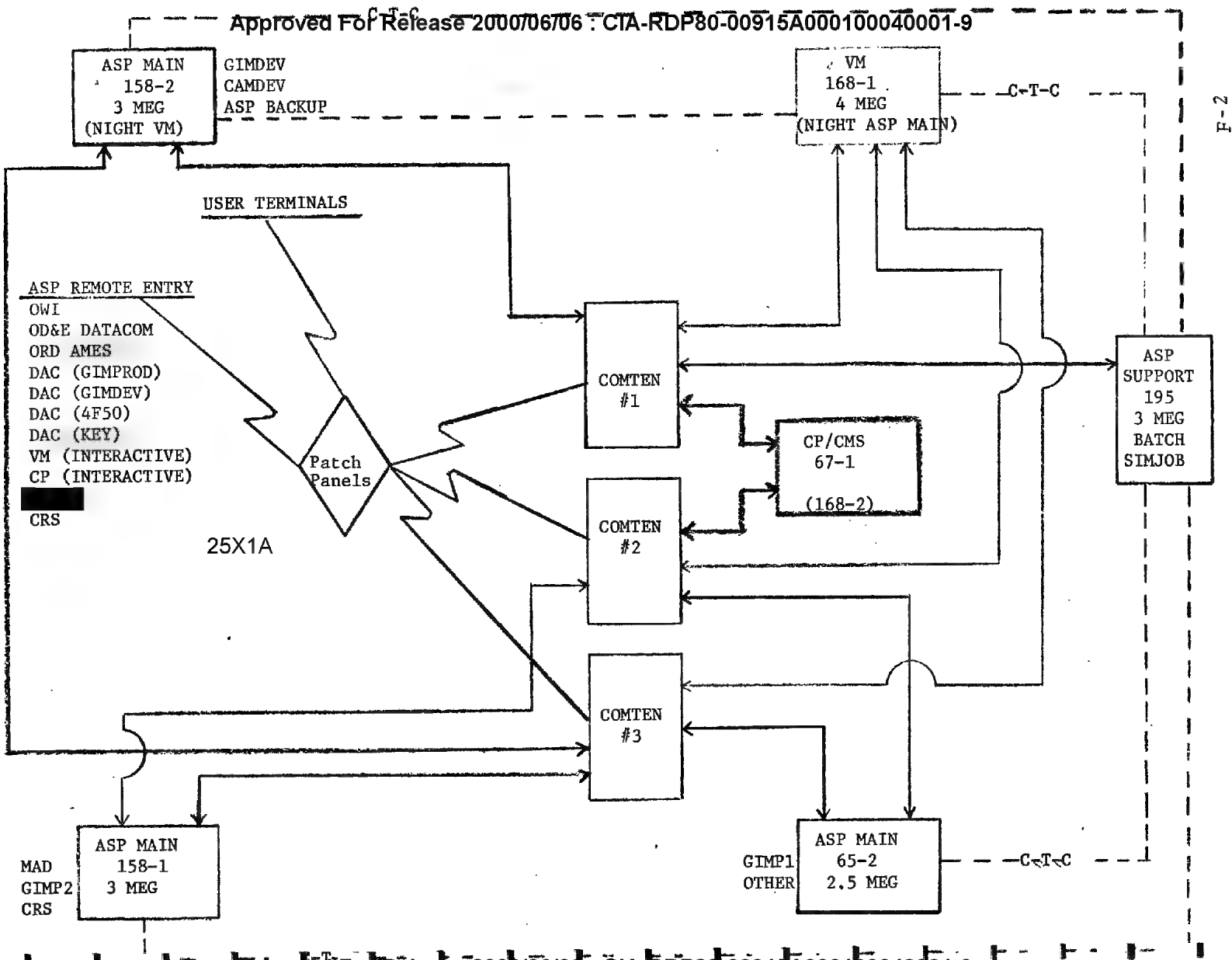

F-2

Approved For Release 2000/06/06 : CIA-RDP80-00915A000100040001-9

Approved For Release 2000/06/06 : CIA-RDP80-00915A000100040001-9

		OUTPUT						
		PATH	NUMBER C.U.(S) CABLES TO PATH	DEVICE(S) TYPE/NO. OF DEVICES	DEVICE(S) NAME(S)	HOST SYSTEM	ALTERNATE HOST SYSTEM(S)
INPUT	168-1 CHAN. 0	A	2	2-COMM CONTROLLER 488 LINES	COMTEN #2; COMTEN #3	168-1	158-2
	158-2 CHAN. 0	B	1	COMM CONTROLLER 116 LINES	COMTEN #1	168-1	158-2
		C	2	2-COMM. CONTROLLER 360 LINES	COMTEN #1; COMTEN #3	158-2	--
		D	10	--	2914 #7	--	168-1/158-2
		E	NOT IN USE	--	--	--	--
	NOT IN USE	F	NOT IN USE	--	--	--	--
		G	1	READER/PUNCH; PRINTER(2)	IBM 2821	168-1	158-2
		H	1	READER/PUNCH; PRINTER(2)	IBM 2821	168-1	158-2
	NOT IN USE	1	1	168-1 CONSOLE	IBM 3066	168-1	--
		2	-	--	--	--	--
		3	-	--	--	--	--
		4	-	--	--	--	--

NOTE: PATHS 1-4 CANNOT BE SWITCHED TO AN ALTERNATE HOST SYSTEM(S).

Approved For Release 2000/06/06 : CIA-RDP80-00915A000100040001-9

Approved For Release 2000/06/06 : CIA-RDP80-00915A000100040001-9

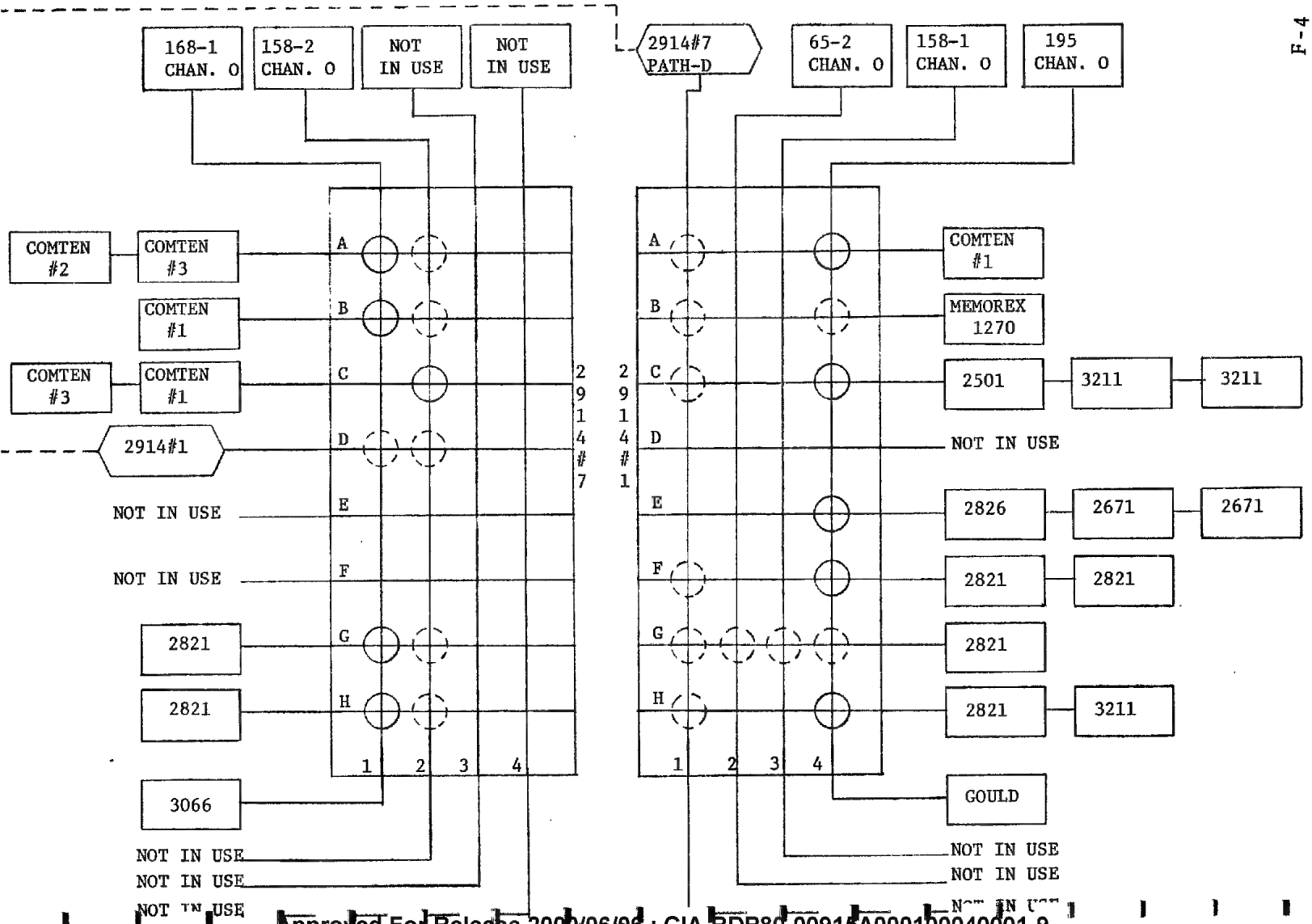

○ = HOST SYSTEM

● = ALTERNATE HOST SYSTEM(S)

Approved For Release 2000/06/06 : CIA-RDP80-00915A000100040001-9

Approved For Release 2000/06/06 : CIA-RDP80-00915A000100040001-9

2914#1 SWITCHING UNIT

INPUT	168-1/158-2 CHAN. 0 FROM 2914 #7 PATH-D	OUTPUT PATH	NUMBER C.U. (S) CABLES TO PATH	DEVICE (S) TYPE/NO. OF DEVICES	DEVICE (S) NAME(S)	HOST SYSTEM	ALTERNATE HOST SYSTEM(S)
I		A	1	COMM.CONTROLLER 116 LINES	COMTEN #1	195	168-1/158-2
	65-2 CHAN. 0	B	1	COMM.CONTROLLER 16 LINES	MEMOREX 1270	--	168-1/158-2 195
N		C	3	CARD RDR/ PRINTERS (3)	IBM 2501, IBM 3211; IBM 3211	195	168-1/158-2
		D	NOT IN USE	--	--	--	--
P		E	3	PAPER TAPE PUNCH AND RDR's (3)	IBM 1018; IBM 2671; IBM 2671	195	--
U	158-1 CHAN. 0	F	2	PRINTERS (2)	IBM 2821; IBM 2821	195	168-1/158-2
		G	1	READER/PUNCH PRINTER (2)	IBM 2821	--	168-1/158-2 65-2/158-1 195
T		H	2	PRINTERS (2)	IBM 2821; IBM 3211	195	168-1/158-2
	195 CHAN. 0	1	NOT IN USE	--	--	--	--
		2	NOT IN USE	--	--	--	--
		3	NOT IN USE	--	--	--	--
		4	1	PLOTTER (1)	GOULD	195	--

NOTE: PATHS 1-4 CANNOT BE SWITCHED TO AN ALTERNATE HOST SYSTEM(S).

Approved For Release 2000/06/06 : CIA-RDP80-00915A000100040001-9

Approved For Release 2000/06/06 : CIA-RDP80-00915A000100040001-9

APPENDIX G

PROPOSED TREND CHARTS

TREND CHARTS	PREDICTION/ACTUAL
Performance	Jobs/Day/Relative capacity - Hrs/Day(Mo.)
	Test Jobs/Total
	Production Hrs./Day
	Incident Reports Initiated/completed/ outstanding/over 10 days old.
	Down time by system/Day/Month - System availability.
	Abends or stops/Day/Month
	EC/FCO level by sub-system.
	Current up/down status by sub-system.
	Software level and open 'bugs'.
	CPU utilization vs. wall clock.
	Overhead - resource and time.
	Heaviest users - 10-20 top jobs and their characteristics.
	Late starts per day/month.
	Requests for Service: a) received b) accepted/rejected c) completed.
	Terminals installed : a) total b) concurrently served at peak. c) response time range.
	Equipment Population.

Approved For Release 2000/06/06 : CIA-RDP80-00915A000100040001-9

Approved For Release 2000/06/06 : CIA-RDP80-00915A000100040001-9

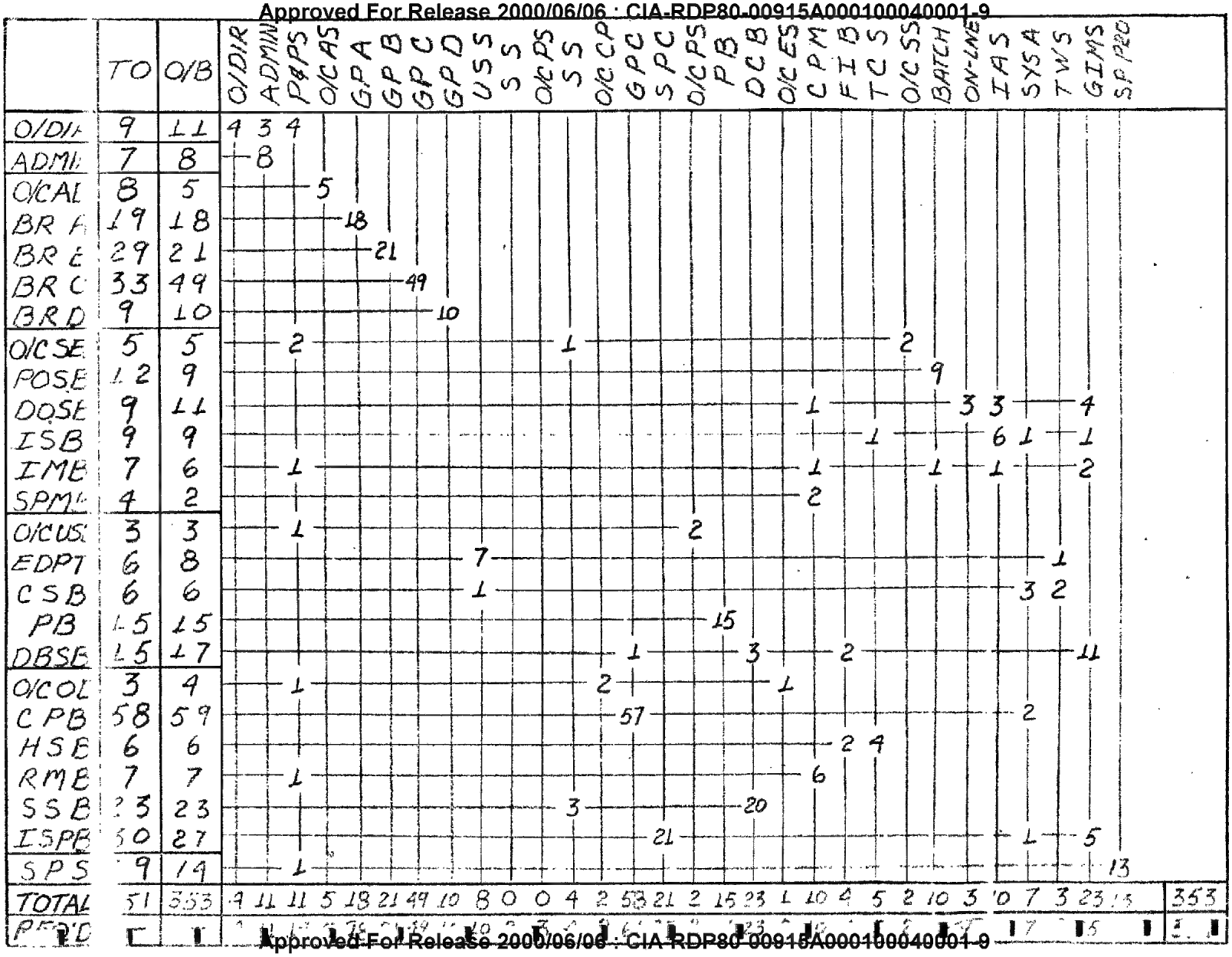

Approved For Release 2000/06/06 : CIA-RDP80-00915A000100040001-9

TREND CHARTS	PREDICTION/ACTUAL
Financial	Monthly lease.
	Monthly maintenance.
	Monthly contract support.
	Salary/benefits.
	Obligations by S.O.C.
Personnel	Turnover.
	Sick leave usage by Division.
	Training.
	Promotions.
	Avg. grade levels by Division.
	Overtime.

Approved For Release 2000/06/06 : CIA-RDP80-00915A000100040001-9

Everything up.

Approved For Release 2000/06/06 : CIA-RDP80-00915A000100040001-9

200 BL 3.2 test test - 5 [illegible]

SIMJOB up - 8 [illegible]

1192 326 = 1518

Approved For Release 2000/06/06 : CIA-RDP80-00915A000100040001-9

Approved For Release 2000/06/06 : CIA-RDP80-00915A000100040001-9

3 May 1976

TASK GROUP CHARTER

1. Assume a basic organizational structure.

2. Clarify and resolve any basic issues with respect to that structure.

3. Break the organizational structure down into its smallest organizational components.

4. Define and document the detailed functions and responsibilities of each component.

5. Review to ensure that all known questions have been resolved or the issues with pros and cons have been identified.

6. Present findings to D/OJCS and DD/OJCS.

Note: Issues that are impeding progress or questions requiring clarification, may be brought to the attention of D/OJCS and DD/OJCS at any time.

Approved For Release 2000/06/06 : CIA-RDP80-00915A000100040001-9

Approved For Release 2000/06/06 : CIA-RDP80-00915A000100040001-9

3 May 1976

REORGANIZATION

3 Principal goals:

Improve the stability and responsiveness of the operating centers.

Provide a planning capability.

Thoroughly document the rationale for the new organization.

Steps needed:

Stability and Responsiveness

° Minimize the coordination required across organizational boundaries to support the daily operating environment.

° Sharply focus responsibilitity for all functions that have an immediate day-to-day impact on stability and responsiveness, including:

- Hardware maintenance and maintenance of system software on the floor.

- System measurement and tuning.

- Priority control.

- Production and data base management.

° Give priority to hardware and software maintenance for any problem which is seriously impacting current operations.

Planning

° Create a planning organization to plan on an on-going rather than ad hoc crisis-oriented basis (1-5 years).

° Link the planning cycle to the annual program and budget cycle.

Approved For Release 2000/06/06 : CIA-RDP80-00915A000100040001-9

Approved For Release 2000/06/06 : CIA-RDP80-00915A000100040001-9

- Provide trend information as a measurement of the adequacy of previous plans and as a basis for new planning initiatives.

Documentation

- Prepare a comprehensive organizational document describing the organizations, functions, and responsibilities of the organizational components and their methods of operation.

Approved For Release 2000/06/06 : CIA-RDP80-00915A000100040001-9

Approved For Release 2000/06/06 : CIA-RDP80-00915A000100040001-9

3 May 1976

AREAS OF RESPONSIBILITY THAT NEED TO BE PINNED DOWN

1. GIMS management from the womb to the tomb.

2. Development and design of hardware/software systems a year or more in the future.

3. Review and approval of new acquisitions [redacted] 25X1A

4. Monitoring users of operating systems to guard againt abuse.

5. Reviewing software developed elsewhere (e.g. by CRS) to ensure its efficiency.

6. Auditing our own applications software to ensure its efficiency.

7. Resource management - what should it consist of and what is an adequate level of effort.

8. Introduction of new software systems: testing, approval, and operating transition.

9. Where should special projects lie (CAMS, TADS, RAPID, etc.)?

10. Security responsibility below the SO.

Approved For Release 2000/06/06 : CIA-RDP80-00915A000100040001-9

Approved For Release 2000/06/06 : CIA-RDP80-00915A000100040001-9

CDM

12 DEC 1975

MEMORANDUM FOR: Director of Joint Computer Support

SUBJECT : OJCS Problems and Recommendations

1. This report discusses current problems in OJCS which directly affect the current and future operations. Recommendations are contained in paragraph 15.

2. The overall problem in OJCS is the breakdown of authority and responsibility in handling day-to-day vital functions that are absolutely necessary for stable and efficient operations. These problems stem from the reorganization which was put into effect on 15 July 1973. This reorganization was never expanded to assign tasks and develop priorities necessary to adequately manage the OJCS responsibilities. Further, many of the assigned staffs are no longer functional and Division responsibilities have been drastically changed. All of this without any apparent documentation and mostly by the assumption of tasks not described or assigned under the original reorganization paper.

3. Several basic areas need to be studied, supporting functions listed and responsibility assigned. Some of these areas are:

a. Management of the Computer Center to assure efficient and timely response to requests for data processing (assigned to Operations Division). This function requires hardware, system software, system tuning operating procedures, operators and some control on users. However, we can see that most of these supporting functions belong to other OJCS Divisions and Staffs and OD does not have the authority necessary to "assure efficient and timely" operations.

b. Configuration control, hardware maintenance, facilities and facility maintenance, computer resource management and supporting services of power, cooling, communications and contract management is not even mentioned or assigned.

c. Maintaining applications software and scheduling for production (assigned to Applications Division) was moved to User Support Division without any apparent reorganization.

Approved For Release 2000/06/06 : CIA-RDP80-00915A000100040001-9

Approved For Release 2000/06/06 : CIA-RDP80-00915A000100040001-9

d. Assumption of CRS support and hardware and the assignment of the DDO Computer Center was also done without any apparent reorganization.

e. Data Management Center(s) - their operation and disk space control on the CP/VM Systems was assigned to User Support Division while SHARE disk space control (OS) is in Operations Division. There is thus no central control of these resources and no one has "the complete story."

f. The trouble desk is located in the DAC and received information is called to Operations Division where most action and detailed information is needed urgently. This function is not defined nor responsibility listed. Further, Operations Division has designed and uses an incident card to record and track trouble reports - neither USD nor SED is responsible to use these cards.

g. Hardware and supply ordering, receiving, installation, accounting and procuring (through OL) are Operations Division assigned responsibilities. However, all planning (SED), configuration (SED), approval (Planning Staff), signoff (D/OJCS) and order processing (Admin Staff) are actually accomplished. This again gives OD the responsibility, but no real authority.

h. Measures, evaluates, and tunes computer systems (assigned to SED) directly impacts the efficiency of the computers and the projection of computer processing service in all areas from computer power to peripheral equipment. Yet the efficiency and timely service are assigned to Operations Division.

i. No one currently monitors users to ensure that they do not abuse the computer systems at the expense of other users. This function is not assigned and again has an impact on the OD efficiency of the overall service.

4. The above problems of duplication, cross Division responsibility and missing functions are all handled if and when someone has the time or inclination. However, repeated instances arise in the morning staff meetings where no Division or Staff member accepts responsibility for a problem as a required action. An action then must be assigned by D/OJCS. Everything is handled as an exception rather than through a normal defined function. This tends to further redefine responsibilities.

Approved For Release 2000/06/06 : CIA-RDP80-00915A000100040001-9

Approved For Release 2000/06/06 : CIA-RDP80-00915A000100040001-9

5. All of these problems create an environment in which a great deal of manpower is wasted in "coordination" and repetitious study (bottle necks). This in turn results in elimination and/or inadequate performance of many critical functions. The net result of all of this is that more and more "fires" are started which in turn consume more manpower, which eliminates more functions, which create more fires, until no manpower is available to make productive efforts to stop the degradation cycle.

6. Do not believe that everything in OJCS is bad. It is not. The good would far exceed the bad. However, there are critical functions which need to be adequately explored, defined, stream-lined and assigned. This is not an easy task in an environment as dynamic complex and critical as OJCS. There is no way to keep all sub-functions (support) within the same management responsibility below the D/OJCS level. However, all of the functions and supporting sub-functions can be assigned to eliminate duplication, clarify responsibilities, establish priorities and stop wasting manpower and computer power in putting out fires.

7. We must recognize that a central computer facility operation crosses all lines of organization at some point regardless of the organization structure. The idea is to so organize to maximize the service provided and minimize the daily coordination required across organizational lines. This can be done within the current OJCS structure by redefining and redistribution of key functions. However, the span of control becomes rather unwieldy and some duplication of effort may become necessary. A more reasonable long term goal would be a complete reorganization of both functional and organizational structure.

8. There are four major real world requirements for a good computer organization. Hardware, software, operations and management. We can expand it this way:

a. Hardware configurations must be researched to meet management needs, specifications written, procurement effected, installation plans completed, hardware received, installed and maintained.

b. Software (both system and user) must be researched, developed or procured, installed and maintained.

c. A properly integrated, tested and maintained hardware/software system is provided to an operations element.

Approved For Release 2000/06/06 : CIA-RDP80-00915A000100040001-9

Approved For Release 2000/06/06 : CIA-RDP80-00915A000100040001-9

d. This operating element provides procedures, operators and schedules to meet management service objectives. Further it provides feedback to both hardware and software elements for all trouble encountered.

e. This total is monitored and paid for by management. Management measures the quality, quantity and cost of service and projects what future changes are necessary to meet expanded service requirements. These requirements are given to the hardware/software elements to effect changes in current or future integrated system plans.

9. One can see that there are really two main chains of activity:

a. Current operations - That integrated hardware/software, operator/user system which is currently doing work. This system must be maintained on a semi-realtime basis so current needs can be met.

b. Future operations. Those integrated and tested hardware/software facilities that are being developed or procured to meet new or changing needs. These tested changes will become part of the current operations after installation and acceptance by current operations.

10. One can see that there are two functional areas (not counting management) that overlap in the main chain of activities. They are:

a. Hardware and software maintenance - Here the hardware and software already "delivered" has problems and needs to be fixed. We could provide these services in the Current Operations chain, but a greal deal of duplication would be necessary. It would be better for "Current Operations" to task Future Operations to fix the hardware or software problem because they are already familiar with the integrated system provided. No

b. The transfer of "future systems" to current operations is best monitored by a coordinating staff (responsible to current operations) but tasked by future operations to schedule, track, test and accept the new system (system changes) into current operations. They would maintain pert type charts to ensure that both current operations and future operations are ready and can effect an orderly transfer. They would also be responsible for scheduling current operations time for hardware and software maintenance and test of future integrated systems.

Approved For Release 2000/06/06 : CIA-RDP80-00915A000100040001-9

Approved For Release 2000/06/06 : CIA-RDP80-00915A000100040001-9

11. The key function left is management. Here we are not talking about organizational line management. What we do need is basic support and overall collection and analysis of management and system data necessary to make correct decisions and prepare internal and external policy and procedure recommendations for line management. These functions are:

a. Budget and fiscal data. This is a collection of contract obligations, expenditures and projections maintained on a current basis for input to management decisions. It includes financial analysis of ways and means of saving money in one area to pay for needs in other areas.

b. User charge and accounting data. This is basically the user accounting data derived from daily SMF-type recordings.

c. Current support data - This is the daily activity reports and records of work accomplished by all systems. It also includes the posting and maintenance of Incident Card records to ensure that contract obligations are met and that the government recovers any rental, training or other credits due from suppliers.

d. System Measurement data analysis - This is the analysis of current support data and hardware monitor data. These analysis will identify current system user programs and/or support bottlenecks which need to be corrected or eliminated for better overall system service.

e. User use and monitor reports - To determine if a user is actually making good use of facilities (disk space, tapes, terminals) provided for their use.

f. Pert networking and other tracking needed to ensure that plans and commitments approved by management are tracked during the development implementation, testing and transfer. This will help provide management status on all plans and programs.

g. Housekeeping functions of personnel, supplies, training, security, space, etc. which ~~is~~ are normal in any organization.

12. The line organization required to support the functions described is quite simple. It requires a double deputy system under the D/OJCS. This means that only those conflicts and/or decisions which affect the total internal OJCS organization need

Approved For Release 2000/06/06 : CIA-RDP80-00915A000100040001-9

Approved For Release 2000/06/06 : CIA-RDP80-00915A000100040001-9

to be presented to D/OJCS. All normal day-to-day support operations are handled by one deputy and all development and system maintenance are handled by the second deputy. These two people coordinate and have line control of all resources in OJCS to ensure compliance with all policies and decisions. Further, they have available to them the skills in sufficient numbers to provide the much needed flexibility to react to new priorities and problems. One possible line organization is included as Attachment 1.

13. One of the primary advantages of this organization is that hardware, system software, user support software, and the applications software are under control of one man during the development cycle. There should, therefore, be no interface or development timing problems between the various personnel as exists today. The only time that current operations get into the act is in pre-installation testing and acceptance of the new system. At this time, current operations can make absolutely sure that all special problems related to normal job streams, special support packages, operator training and user training are tested before full acceptance of the system for current operations use.

Agree

14. One primary weakness is the impact that future operations can have on current operation if maintenance on facilities, hardware, system software and user support packages is not provided on a priority basis. This can be handled easily by specifying that the maintenance will be accomplished on the basis established by DD/current operations. For other needed support, future operations is tasked by current operations as a user. Future operations also tasks current operations as a user for its block time and facilities required to do its job.

I will soon have all of my Syst working for him

15. It is recommended that the following actions be taken on a priority basis:

Agree

a. Develop an OJCS policy which effectively states that hardware and system software maintenance has priority over all other tasks when the problem is seriously impacting current support operations.

Agree

b. That all problems related to (a) above be recorded on the Operations Division incident card and tracked until fixes are provided.

Agree

c. That OJCS start a recruiting effort to find an EE with the right background to head up the OJCS hardware effort. Two additional EE positions should be authorized for this effort.

Approved For Release 2000/06/06 : CIA-RDP80-00915A000100040001-9

Approved For Release 2000/06/06 : CIA-RDP80-00915A000100040001-9

d. Develop a complete list of critical and supporting functions which are necessary to acomplish the total OJCS mission. Once this list is developed, group them into related areas which might be utilized to restructure responsbility in OJCS.

25X1A

Principal problems I have with this paper.

1. Depending upon future Ops for maintenance support of Current Ops will cause constant conflicts in priorities. Current Ops should have its own capability even tho some functional duplication may ~~be~~ result.

2. Organizational concept is geared to ~~the~~ running of the computer centers only - It makes no provision for other OJCS functions

   a. Central review authority for Agency ADP applications

   b. Technical advice and assistance to other Agency components

   c. Agency-wide policy on ADP

   d. Interface with external world - (IAC/ADP)

Approved For Release 2000/06/06 : CIA-RDP80-00915A000100040001-9

Approved For Release 2000/06/06 : CIA-RDP80-00915A000100040001-9

Attachment 1

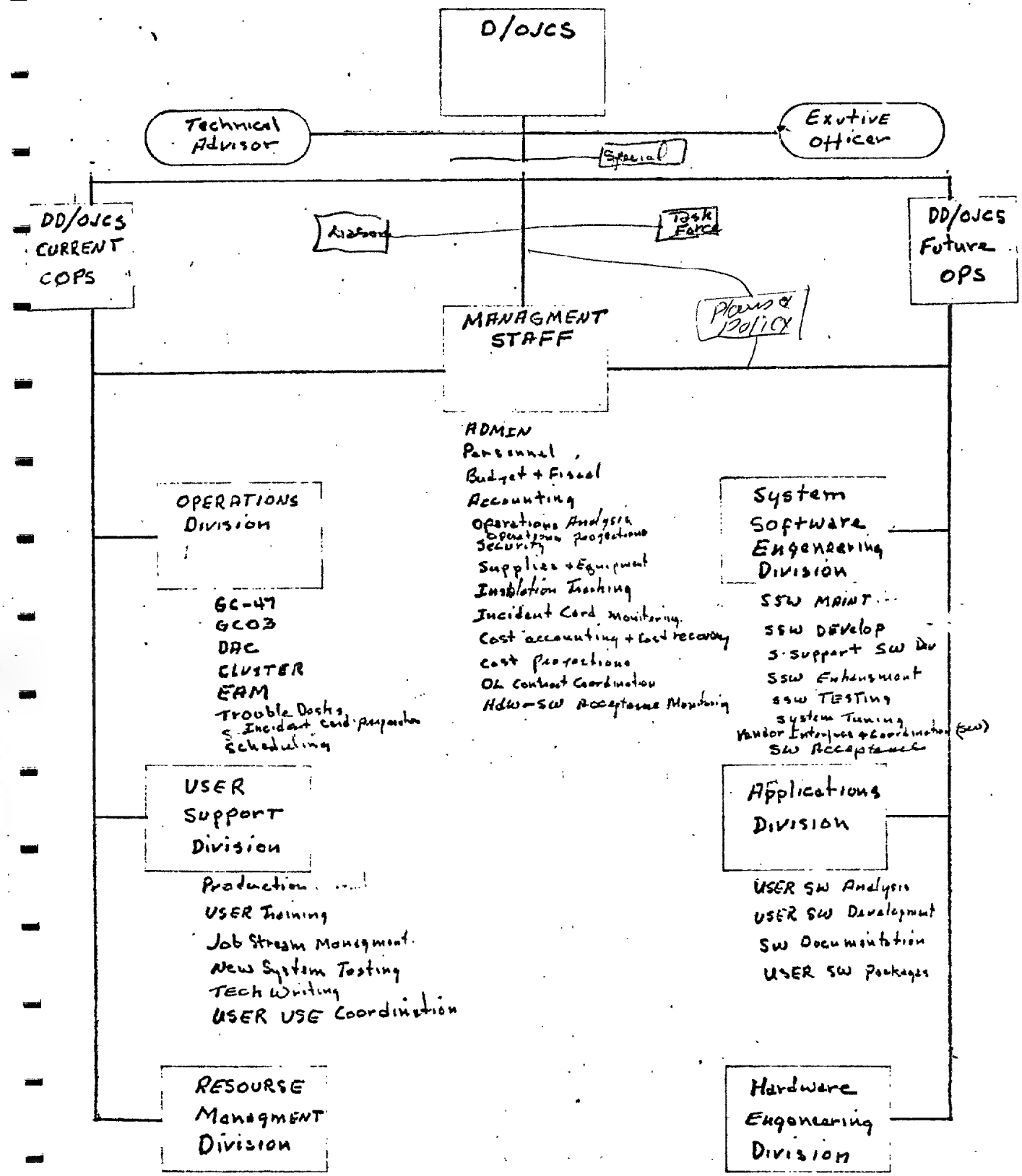

Approved For Release 2000/06/06 : CIA-RDP80-00915A000100040001-9

Approved For Release 2000/06/06 : CIA-RDP80-00915A000100040001-9

OJCS ORGANIZATIONAL TASK FORCE

ISSUE: Is there sufficient justification for the existence of a Special Projects Staff-like component in the new organizational structure separate from the day-to-day line component organizations?

AFFIRMATIVE POSITION:

The creation and existence of Special Project Staff (SPS) within OJCS is an exceptional case brought on by 1) the desire of the previous Director for OJCS management for larger projects and 2) the non-availability of funds for SAFE. In addition the SAFE project was separately organized to ensure a successful development while not swamping the rest of OJCS. While the aforementioned is acknowledged, the inclusion of a SPS-like component permits and encourages the isolation of Central Processing functional responsibilities and activities from stand-alone system development activities. This goal is consistent with the goal of increasing the stability and responsiveness of the line-organizational components, Processing Services and Application Services.

The importance of maintenance activities versus the interest and appeal of Development Activities is a prevalent issue throughout the ADP Industry as well as other industries. The existence of a SPS-like component with the explicit functional responsibility for stand-alone Application development directs an obvious and concentrated effort for the Processing Services and Application Services components toward maintenance of the central processing facilities.

An opposing argument is given that "Application development is Application development" and there is no need to distinguish stand-alone application development from central processing application development. It should be noted that system development is different from application development. While there is commonality in the process of developing Application software, in addition to operating System Development and/or modification implications, there are basic and unique differences required for stand-alone Application Development such as varying degrees of contract management, Logistic support coordination for environmental utilities, RFP Development, evaluation, and procurement coordination, system operation procedures and resource requirements, etc. OJCS' image has been damaged in the past by our attempt to treat all users as equals. Some user requirements must be addressed as unequals in attempting to solve and meet unique processing requirements.

Approved For Release 2000/06/06 : CIA-RDP80-00915A000100040001-9

Approved For Release 2000/06/06 : CIA-RDP80-00915A000100040001-9

While the question of "what happens to the developers of the stand-alone application system once it is operational and who maintains the system" has to be addressed, the resolution of this aspect of each project should be on an individual project basis. For example, CRS was desirous of absorbing some of the developers of SAFE for maintenance and operations; OS trained guards to operate the AAMS Hardware and Hardware and Software maintenance were contracted to the vendor and tasked to Applications Division, respectively. The requirements for each application must be appraised, the necessity for establishing a general rule with strict adherence regulations is not required at this time.

A common desire of the Organizational Task Force is to combine the components for planning and programs and management services. This act encourages the analysis of performance data of current systems and the necessary task of forecasting and planning future systems for long-range planning. A SPS-like group within the planning component eliminates duplication and permits control of industry investigations of future system facilities to one group; such that information gathered and analyzed for one function can be used or expanded for use in other functions without incurring duplicate expense.

In summary, if a primary goal of the organization is increased stability, reliability and availability, concentrated effort and direction must address not only simplifying the complex processing environment but also simplifying the concerns of management on the line components. There is a commonality between planning and project development activities which include not only applications software development but development and/or procurement of Operating System Software, utility software, hardware, site preparation, and operational requirements.

Approved For Release 2000/06/06 : CIA-RDP80-00915A000100040001-9

"EYES ONLY"

Approved For Release 2000/06/06 : CIA-RDP80-00915A000100040001-9

UNCLASSIFIED | INTERNAL USE ONLY | CONFIDENTIAL | SECRET

ROUTING AND RECORD SHEET

SUBJECT: (Optional)

OJCS Management Study

25X1A

FROM: [redacted]
C/SPS/OJCS
402 Ames

EXTENSION: 2088

NO.

DATE: 23 April 1976

TO: (Officer designation, room number, and building)	DATE RECEIVED	DATE FORWARDED	OFFICER'S INITIALS	COMMENTS (Number each comment to show from whom to whom. Draw a line across column after each comment.)
1. D/OJCS				Enclosed are the slides used in the 22 April briefing on the OJCS Management Study. These should be handled as "EYES ONLY" until the management actions from this study are announced by D/OJCS.
2.				
3.				
4.				
5.				[redacted]
6.				C/SPS/OJCS
7.				
8.				25X1A
9.				Dennis Also Chart A2
10.				
11.				
12.				
13.				
15.				

Approved For Release 2000/06/06 : CIA-RDP80-00915A000100040001-9

FORM USE PREVIOUS | CONFIDENTIAL | INTERNAL

Approved For Release 2000/06/06 : CIA-RDP80-00915A000100040001-9

I. OBJECTIVES AND SCOPE

MOTIVATION FOR THE STUDY

ELEMENTS TO BE EXAMINED

LIMITATION OF SCOPE

RESIDUE

Approved For Release 2000/06/06 : CIA-RDP80-00915A000100040001-9

Approved For Release 2000/06/06 : CIA-RDP80-00915A000100040001-9

II. WHAT DO WE DO ?

A) COMPUTER PROCESSING SERVICE

B) APPLICATIONS ADVICE AND SERVICE

C) PLANNING

D) POLICY DEVELOPMENT

E) ADMINISTRATION

Approved For Release 2000/06/06 : CIA-RDP80-00915A000100040001-9

Approved For Release 2000/06/06 : CIA-RDP80-00915A000100040001-9

III. METHOD

INTERVIEWS

PROBLEM ANALYSIS

GLOBAL PICTURE

ACTION FORMULATION

Approved For Release 2000/06/06 : CIA-RDP80-00915A000100040001-9

Approved For Release 2000/06/06 : CIA-RDP80-00915A000100040001-9

IV. PROBLEM SUMMARY

1. ADMINISTRATIVE

A) ORGANIZATIONAL ALIGNMENT
B) PLANNING
C) MANAGEMENT
D) PERFORMANCE EXPECTATIONS AND MEASUREMENTS

2. TECHNICAL

A) HEAVY LOAD
B) COMPLEX ENVIRONMENT
C) ON-LINE USE
D) MANAGEMENT IN CRISIS

3. WAYS OF LIFE

A) UNCONTROLLED INPUT
B) RESOURCES
C) OUTSIDE USERS

Approved For Release 2000/06/06 : CIA-RDP80-00915A000100040001-9

Approved For Release 2000/06/06 : CIA-RDP80-00915A000100040001-9

V. SITUATION ANALYSIS

1. SYSTEM RELIABILITY
   - A) EQUIPMENT GENERALLY ADEQUATE
   - B) CHANGE AND CONFIGURATION
   - C) SPLIT RESPONSIBILITY
   - D) HARDWARE MAINTENANCE

2. COMPLEXITY
   - A) OBJECTIVES NOT MET

3. MANAGEMENT PROCEDURES AND CONTROLS
   - A) PERFORMANCE STANDARDS
   - B) ORGANIZATIONAL PERFORMANCE REVIEWS
   - C) SECURITY FOR EXAMPLE
   - D) QUALITY CONTROL

4. LOADS VS. STAFF
   - A) LOAD 266 - STAFF 11 (71)
   - B) ANALYSIS SUFFERS

5. CRISIS MANAGEMENT
   - A) LEADER & ORGANIZATION & CHIEFS = CRISIS
   - B) COORDINATION REQUIRED

6. ISOLATION

Approved For Release 2000/06/06 : CIA-RDP80-00915A000100040001-9

8. OSCS MISSION AND POLICIES

Approved For Release 2000/06/06 : CIA-RDP80-00915A000100040001-9

VI. PROPOSED ACTIONS:

A) MAKE RELIABILITY/AVAILABILITY A KEY SYSTEM GOAL.

B) ESTABLISH PERFORMANCE EXPECTATIONS AND REVIEW ACTUAL AGAINST PLAN.

C) REVIEW KEY INDICATORS MONTHLY.

D) ESTABLISH AND MAINTAIN TREND INFORMATION TO SUPPORT MANAGEMENT DECISIONS.

E) SLOW AND CONTROL THE RATE OF HARDWARE AND SOFTWARE CHANGE.

F) SIMPLIFY THE CENTER BY ISOLATING CLASSES OF SERVICE.

Approved For Release 2000/06/06 : CIA-RDP80-00915A000100040001-9

Approved For Release 2000/06/06 : CIA-RDP80-00915A000100040001-9

G) ESTABLISH A FORMAL QUALITY ASSURANCE PROCEDURE FOR APPLICATIONS GOING TO PRODUCTION STATUS. SET Q.A. POLICY FOR OJCS DELIVERABLES.

H) AUDIT APPLICATIONS FOR PROPER USE OF RESOURCES.

I) DEVELOP AND MAINTAIN A 5-YEAR PLAN AND A 5-10 YEAR OUTLOOK.

J) ASSIGN ONE MAN TO WORK WITH THE SECURITY OFFICES ON TECHNICAL SECURITY.

K) MAKE THE ADP CONTROL OFFICER SYSTEM WORK BY DEFINING ACCOUNTABILITY FOR RESULTS.

L) ESTABLISH POLICY AND PROCEDURES IN MAJOR AREAS (SEE PROBLEM #48, 49). SET A POLICY ON SUPPORTED SOFTWARE.

Approved For Release 2000/06/06 : CIA-RDP80-00915A000100040001-9

Approved For Release 2000/06/06 : CIA-RDP80-00915A000100040001-9

48. Procedures are weak or lacking in the following areas:

a) Maintenance
b) Configuration control.
c) Terminal requests.
d) Budget and fiscal matters.
e) Service requests.
f) Incident report handling.
g) Problem analysis.
h) Production handling.
i) Project management.
j) Resource usage accountability.
k) Project registry.

49. Policy definitions are weak or lacking in the following areas:

a) Agency ADP control.
b) New applications.
c) Centralized vs. decentralized control.
d) Cost accountability for resource utilization.
e) Control of input.

Approved For Release 2000/06/06 : CIA-RDP80-00915A000100040001-9

Approved For Release 2000/06/06 : CIA-RDP80-00915A000100040001-9

M) RE-ALIGN THE ORGANIZATION TO BRING RESPONSIBILITY AND AUTHORITY TOGETHER AND PERMIT ESTABLISHMENT OF ACCOUNTABILITY FOR RESULTS.

N) ZERO-BUDGET STAFF IN THE NEW ORGANIZATION.

Approved For Release 2000/06/06 : CIA-RDP80-00915A000100040001-9

Approved For Release 2000/06/06 : CIA-RDP80-00915A000100040001-9

OBJECTIVES OF ORGANIZATIONAL ALIGNMENT:

1. Effective execution of "OJCS Major Functions".
2. Clear assignment of responsibility.
3. Authority commensurate with responsibility.
4. Minimize inter-organizational contention.
5. Provide decision-making at proper levels.
6. Reduce the number and level of crises.
7. Provide clear direction for future operations.
8. Reduce the list of problems and minimize the creation of new ones.
9. Develop better management control of the organization.

Approved For Release 2000/06/06 : CIA-RDP80-00915A000100040001-9

Approved For Release 2000/06/06 : CIA-RDP80-00915A000100040001-9

APPENDIX A

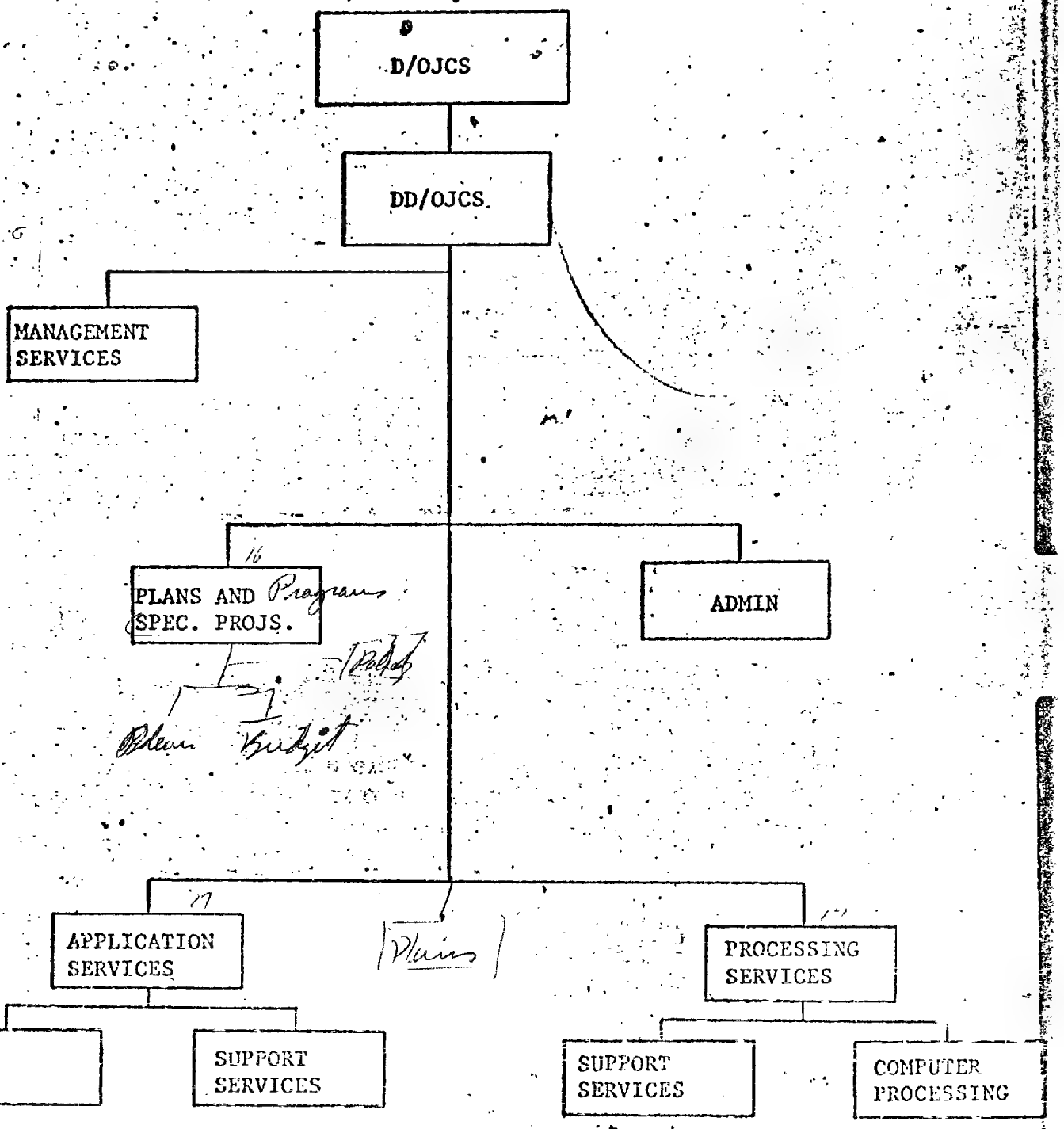

Approved For Release 2000/06/06 : CIA-RDP80-00915A000100040001-9

Approved For Release 2000/06/06 : CIA-RDP80-00915A000100040001-9

APPENDIX G

PROPOSED TREND CHARTS

TREND CHARTS	PREDICTION/ACTUAL
Performance	Jobs/Day/Relative capacity - Hrs/Day (Mo.)
	Test Jobs/Total
	Production Hrs./Day
	Incident Reports Initiated/completed/ outstanding/over 10 days old.
	Down time by system/Day/Month - System availability.
	Abends or stops/Day/Month
	EC/FCO level by sub-system.
	Current up/down status by sub-system.
	Software level and open 'bugs'.
	CPU utilization vs. wall clock.
	Overhead - resource and time.
	Heaviest users - 10-20 top jobs and their characteristics.
	Late starts per day/month.
	Requests for Service: a) received b) accepted/rejected c) completed.
	Terminals installed : a) total b) concurrently served at peak. c) response time range.

Approved For Release 2000/06/06 : CIA-RDP80-00915A000100040001-9

Approved For Release 2000/06/06 : CIA-RDP80-00915A000100040001-9

TREND CHARTS	PREDICTION/ACTUAL
Financial	Monthly lease.
	Monthly maintenance.
	Monthly contract support.
	Salary/benefits.
	Obligations by S.O.C.
Personnel	Turnover.
	Sick leave usage by Division.
	Training.
	Promotions.
	Avg. grade levels by Division.
	Overtime.

Approved For Release 2000/06/06 : CIA-RDP80-00915A000100040001-9

Approved For Release 2000/06/06 : CIA-RDP80-00915A000100040001-9

PROPOSED OJCS ORGANIZATION

Prepared for

Director, Office of Joint Computer Support

May, 1976

Looks like it was written by several different people - Inconsistent in wording & format.

by:

OJCS Organization Task Force

[redacted]

25X1A

Approved For Release 2000/06/06 : CIA-RDP80-00915A000100040001-9

Approved For Release 2000/06/06 : CIA-RDP80-00915A000100040001-9

PROPOSED OJCS ORGANIZATION

PREFACE

This document presents the rationale and background, a proposed organizational structure and functional responsibilities for an OJCS organization as tasked by Director, OJCS.

Approved For Release 2000/06/06 : CIA-RDP80-00915A000100040001-9

Approved For Release 2000/06/06 : CIA-RDP80-00915A000100040001-9

PROPOSED OJCS ORGANIZATION

TABLE OF CONTENTS

Para. Page

Preface ii

SECTION I

INTRODUCTION

1.1 PURPOSE AND SCOPE

1.2 BACKGROUND

1.2.1 OJCS History
1.2.2 OJCS/SPS Management Study
1.2.3 OJCS Organizational Task Force Charter
1.2.4 Task Force Methodology

SECTION II

THE PROPOSED ORGANIZATION

2.1 GENERAL COMMENTS

2.2 THE PROPOSED ORGANIZATIONAL STRUCTURES

2.3 ORGANIZATIONAL COMPONENT MISSIONS AND FUNCTIONAL RESPONSIBILITIES

2.3.1 Administrative Staff
2.3.2 Plans and Programs Staff
2.3.3 Special Projects Staff
2.3.4 Application Services

2.3.4.1 AS/Support Staff
2.3.4.2 AS/User Services Staff
2.3.4.3 AS/Branch A, B, C, and D.

2.3.5 Processing Services

2.3.5.1 Charter of the Processing Services Review Group

2.3.5.2 PS/Computer Processing

Approved For Release 2000/06/06 : CIA-RDP80-00915A000100040001-9

Approved For Release 2000/06/06 : CIA-RDP80-00915A000100040001-9

2.3.5.3 PS/Production Services
2.3.5.4 PS/Engineering Services
2.3.5.5 PS/Systems Support
2.3.5.6 PS/GIMS Services

2.3 MISSION AND FUNCTIONAL RESPONSIBILITIES

SECTION III

OUTSTANDING ISSUES

3.1 INTRODUCTION

3.2 KEY ISSUES

3.3 APPARENT SHORTCOMINGS

SECTION IV
APPENDIXES

A. PRESENT ORGANIZATION

B. THE OJCS/SPS MANAGEMENT STUDY CHARTER

C. THE ORGANIZATIONAL TASK FORCE CHARTER

D. THE ASSUMED ORGANIZATIONAL STRUCTURE

E. REFERENCES

1. Functional Directory
2. 1973 Director, OJCS Memorandum
3. The OJCS/SPS Management Study
4. The 1975 OJCS Management Conference Documentation

Approved For Release 2000/06/06 : CIA-RDP80-00915A000100040001-9

Approved For Release 2000/06/06 : CIA-RDP80-00915A000100040001-9

SECTION I

INTRODUCTION

1.1 PURPOSE AND SCOPE

This document describes an OJCS organization which will improve the stability and responsiveness of the operating centers and provide for a planning capability. Further, this document describes the rationale for establishing the new organization.

Approved For Release 2000/06/06 : CIA-RDP80-00915A000100040001-9

25X1A

Approved For Release 2000/06/06 : CIA-RDP80-00915A000100040001-9

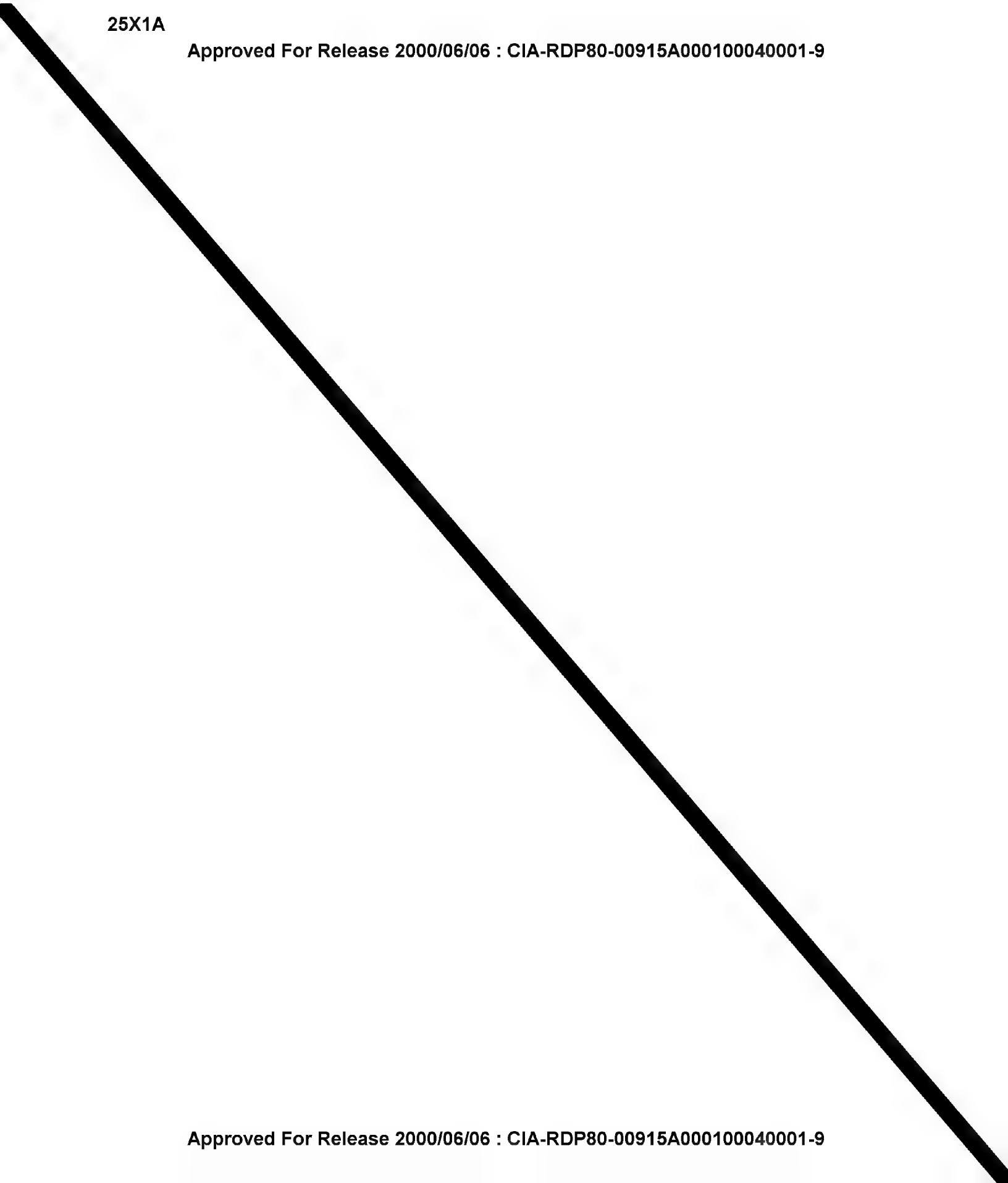

Approved For Release 2000/06/06 : CIA-RDP80-00915A000100040001-9

Approved For Release 2000/06/06 : CIA-RDP80-00915A000100040001-9

25X1A [redacted] was assigned to be the coordinator of the task group. The Task Group was charged with planning an office reorganization which would:

a) Encourage and improve the stability and responsiveness of the operating centers.

b) Provide a planning capability.

The proposed organization was to be thoroughly documented with organization, functions, and responsibilities defined.

ACTION TAKEN:

The task group first compiled a list of functions which OJCS does perform or should perform. Keeping the list of functions in mind, the group began to mold the organization. The task group was given the basic organizational structure (Attachment B) proposed by the SPS study group which included proposed responsibilities for each component. The proposed organization was basically a bifurcated organization which separated applications services from processing services. The first action taken by the task group was to determine the distinction to be made between the Applications Services component and the Processing Services component. The primary issues was the definition of development.

QUESTION: Should Processing Services only concern itself with operation of on-the-floor systems leaving Applications Services the responsibility for all development including the MVS/JES 3 band of development?

QUESTION: Should Applications Services have separate development and maintenance components for application systems?

Although a split between the new systems and applications and maintenance of production systems and applications has certain undeniable attractiveness (the thought being that such a split would isolate and reserve the manpower resources necessary to improve system reliability), it was felt that a complete split between these functions would ultimately lead to decreased system performance. The overriding factor is people. Experience indicates that it is nearly impossible to maintain top quality personnel devoted to maintenance activity. Either the best people quickly migrate to development work where the exciting, interesting work is perceived to be

Approved For Release 2000/06/06 : CIA-RDP80-00915A000100040001-9

Approved For Release 2000/06/06 : CIA-RDP80-00915A000100040001-9

and indeed where the high visibility work is done, or they are kept in maintenance roles where they eventually lose the motivation to excel. The rewards (promotions, citations, etc) in this office have historically gone most surely to the developers of important new systems and projects. Even if rewards for maintenance work were made to be consistent with the importance of this function, it is felt that motivation could not be sustained.

The net result of the development versus maintenance discussion was to place responsibility for short range system development in Processing Services. Applications Services will have responsibility for applications development and maintenance. It was recognized that managers of these components may choose to separate the functions of development and maintenance within the respective components. However, assignments within a component can be more fluid and dynamic when not bound by a restrictive organizational barrier at a higher level in the office.

Along with this discussion, it was decided that the Plans and Programs Staff would have responsibility for the initial investigation and evaluation of hardware and software systems needed for future processing support. Thus, an activity such as MVS/JES 3 development will be performed in Processing Services while the question of an MVS/JES 3 follow-on will be the province of the Plans and Programs Staff. When the follow-on becomes a requirement for implementation, Processing Services will then assume development responsibility.

PROCESSING SERVICES:

Once the split between Applications Services and Processing Services had been defined, the task group began to define subordinate components. The objective of Processing Services is to provide all resources necessary for OJCS processing. Using the proposed responsibilities supplied by the SPS study group and the list of functions compiled by the Task Group, Processing Services was divided functionally into a support staff and five line components: General Processing Center, Special Processing, Production Services, Engineering Services, and Systems Support.

It was quickly decided that the similarity of responsibilities assigned to General Processing (the former Computer Processing

Approved For Release 2000/06/06 : CIA-RDP80-00915A000100040001-9

Approved For Release 2000/06/06 : CIA-RDP80-00915A000100040001-9

Branch of OD), and Special Processing (the former Information Services Processing Branch of OD) called for joining the two components. They were then designated as sub-units within a new component called Computer Processing.

Production Services was formed from the Production Branch and Data Base Services Branch of User Support Division and the Data Conversion Section of Support and Services Branch in Operations Division. Each of these groups directly contributed to production processing. Now all production services was centered in one component which provided increased accountability.

Engineering Services (apart from responsibility for system software) was viewed as being the major focus for system reliability and availability. Therefore, in addition to hardware installation and maintenance responsibility, it was provided with performance monitoring capability, auditing capability, and the responsibility for short range planning. The thought was that these functions are all interrelated and all contribute to configuration Management. Engineering Services was divided into three sub-units: Configuration Management, Facility Installation Planning, and Telecommunications Services.

Telecommunications Services includes the group from Hardware Services Branch in OD which had been providing such service and the group from Interactive Services Branch in SED which provided general technical expertise and software support for the COMTENS. There was some question about the advisability of removing COMTEN software support from the other system software support group (System Support), but it was decided that it should be assigned to telecommunications Services to remove the possibility of contention between two organizational entities in matters concerning the COMTEN and to provide sole accountability for all teleprocessing matters.

Facilities installation planning consists of the group from Hardware Services Branch which performed physical planning in the old organization. The new component and its functional responsibilities remain virtually unchanged with additional responsibility for disaster planning.

Configuration Management is an amalgamation of several activities which were performed in various components of the previous organization. Performance measurement and resource utilization data is gathered by this group of analysis and

Approved For Release 2000/06/06 : CIA-RDP80-00915A000100040001-9

Approved For Release 2000/06/06 : CIA-RDP80-00915A000100040001-9

generation of short range plans to cope with system deficiencies or ineffecticies. Configuration management is the ultimate activity of this group and any plans must be assessed in light of potential impact on the existing configuration. It is felt that this component has been given the resources to deal directly and effectively with the problem of unsatisfactory system availability and reliability. As well as having direct control over hardware configuration changes, it also acts as an auditor in so far as system software is concerned. It also performs incident card and maintenance tracking thus serving as a watchdog over the vendors and Processing Services shortcomings.

Configuration Management is made up of the System Planning and Measurement Staff from Systems Engineering Division (including both the planning and measurement functions), implementation tracking activities such as the 18 Month Plan Implementation Project, Resource Management Branch from Operations Division (to provide resource utilization measurement and auditing capability and maintenance tracking), and the VM system administration function (to provide control over VM resource utilization). This component will also house the Trouble Desk thus coordinating reported troubles with incident card and maintenance tracking.

Systems Support could logically be included in the Engineering Services to place total responsibility for system reliability and availability in one component. However, it was decided that system software support is a significant enough activity to place it under the direct control of and make it accountable to the Chief, Processing Services. Therefore, Systems Support was made a separate entity. Systems Support is broken down into four sub-units: Batch Systems, On-Line Systems, Interactive Systems, and System Assurance. The Technical Writing Staff is also included in System Support.

In an attempt to provide an organizational structure which could mount a concerted effort to maintaining acceptable availability of on-line systems, on-line system support was separated from batch system support. On-line Systems was initially assigned responsibility for supporting GIMS, along with

Approved For Release 2000/06/06 : CIA-RDP80-00915A000100040001-9

Approved For Release 2000/06/06 : CIA-RDP80-00915A000100040001-9

the CRS on-line systems, SANCA, STAR, NIPS, etc.(more about GIMS latter). This component was formed from Information Management Branch of SED.

Batch Systems is largely a reincaration of Production Operating Systems Branch of SED and is responsible for support of the ASP/MVT, SVS, HASP systems as well as development and implementation of MVS/JES 3.

Interface Systems remains unchanged from Interactive Services Branch of SED with the exception of the removal of COMTEN Software support.

Systems Assurance is an expansion of the Consulting Services Branch of USD which performed system acceptability testing and benchmarking in the previous organization. This group was only placed in Systems Support after lengthy discussion and argument. The issue - Placing the responsibility for system assurance in the component which develops and applies maintenance changes to those systems is somewhat akin to the fox guarding the chicken coop. True. However, it was decided that the advantage of having a single component completely accountable for system software acceptability, stability, availability, and reliability outweighed the potential disadvantage of not choosing to implement the formal check and balance function which existed in the old organization. The statement"sharply focus responsibility for all functions that have an immediate day-to-day impact on stability and responsiveness...", from the task group's charter was invoked to lend justification for consolidating accountability. The check and balance system of the previous organization was ineffective and was used primarily following a system implementation to slough off responsibility for system deficiencies after the fact.

Systems Support also is responsible for operator training and development of operator procedures for Computer Processing. (The technician role is removed from computer operations and placed in Systems Support to provide these capabilities). Thus the reduction of system down time caused by software failures, procedural errors, or operator errors attributable to inadequate training is the absolute responsibility of System Support. Finally, the technical writing group from USD was placed in System Support as a staff since most of its activity is generated directly or indirectly by the activity of this component.

Approved For Release 2000/06/06 : CIA-RDP80-00915A000100040001-9

Approved For Release 2000/06/06 : CIA-RDP80-00915A000100040001-9

APPLICATIONS SERVICES AND SPECIAL PROJECTS

Applications Services is basically Applications Division from the old organization. A User Services Staff has been added to provide user consulting service and training. Training capability is provided by placing the EDP Training Branch of USD in Applications Services. The rationale used to do so was that Applications Services is to be the primary OJCS interface with OJCS users. A new responsibility for providing necessary central minicomputer support to applications development was added to this staff. A basic issue developed from the placement of Special Projects Staff within this organization. A majority of the group felt that an application is an application is an application and the activities of SPS should fall within the domain of Applications Services. A minority position paper was prepared which took the position that the work of SPS was significant enough to be isolated and placed in an equivalent line position with Applications Services and Processing Services. The issue was taken to the Director for resolution. The Director stated that the activity of SPS was too important to bury in another component, that he required SPS to be directly accountable to him, and that it will stand alone. The issue was resolved. Applications Services and Special Projects Staff (the proposal of the original study group to place SPS with Plans and Programs had been quickly dismissed) were now defined.

Approved For Release 2000/06/06 : CIA-RDP80-00915A000100040001-9

Approved For Release 2000/06/06 : CIA-RDP80-00915A000100040001-9

PLANS AND PROGRAMS:

One of the goals of the reorganization was to provide a planning capability. The planning and policy formulation responsibility is with Plans and Programs. As conceived by the task group, Plans and Programs had to include technical planning (including technical security planning) as well as budget and program preparation. Technical planning must accommodate long range system planning for both hardware and software system support. This function implies a high level of technical knowledge and the ability to assess development in the technical world of EDP for potential benefit to the Office. In this regard, Plans and Programs must be the Office front runner in maintaining preparedness to satisfy future processing requirements.

The Management Services Staff as proposed by the SPS study was merged with Plans and Programs to provide the capability for data analysis, report preparation, etc. Plans and Programs must have data analysis capability from which to gauge how well the Office performs its mission with available resources and to be able to plan for new resources as required (personnel, equipment, software, etc).

Approved For Release 2000/06/06 : CIA-RDP80-00915A000100040001-9

Approved For Release 2000/06/06 : CIA-RDP80-00915A000100040001-9

GIMS SERVICES:

Once the organization for the Office had been laid out, the task group undertook an extensive review of the proposed new organization to ascertain whether it indeed was responsive to the direction given by the Director. Once the major considerations with which the Director tasked the group was to improve GIMS project management from womb-to-tomb. It became evident during the review of the organization that little had been done to strengthen GIMS management or to eliminate the multiple levels of necessary coordination inherent in the old organization. The task group decided to group all of the GIMS related activity imbedded in Processing Services into a separate component. Such an action spawns some duplication of effort (the GIMS group requires its own system performance measurement capability) but such duplication was considered a small price to pay for strengthening GIMS management. GIMS Service consists of the GIMS support group from Information Management Branch of SED, DAC of USD, and additionally, a system performance measurement capability.

GIMS Service was first placed in Production Services as a sub-unit. However, using reasoning similar to that which resulted in SPS being separated from Applications Services, GIMS Services was made a separate line component responsible to Chief, Processing Services. The reasoning was that GIMS supports many of the most important applications in this Agency, yet was once of the most troublesome activities in the old organization. Commitment to supporting GIMS must be emphasized by making it a separate component with complete responsibility for GIMS availability and reliability.

Approved For Release 2000/06/06 : CIA-RDP80-00915A000100040001-9

Approved For Release 2000/06/06 : CIA-RDP80-00915A000100040001-9

SECTION II

THE PROPOSED ORGANIZATION

2.1 GENERAL COMMENTS

The primary objective of the proposed organization was to make reliability and availability the primary goal of OJCS by providing resources, responsibilities, and accountability to organizational components such that reliability and availability can be measured and effective action can be taken to affect improvements. This objective was addressed by specifically defining the functional responsibilities of each organizational component, identifying and/or allowing provisions for the necessary resources, and establishing managerial accountability for the organizational components commensurate with the defined responsibilities. Further, an objective was to restrict, as much as possible, split responsibilities. Where split responsibilities do exist to provide responsibility transitional procedures and qualities to eliminate, as much as possible "finger-pointing".

To compensate for inadequate planning and analysis in the existing organization, planning was grouped into two areas short-range (the operating and programmed fiscal years) and long-range (the third through fifth) or out years of fiscal program submissions. Analytic responsibilities were assigned to both the short-range and long-range planning functions to provide multiple fronts for generation and presentation of alternative solutions to problems.

No major changes are proposed for Special Projects Staff or Administration Staff.

Two major organizational components, Application Services and Processing Services, are proposed to manage and be accountable for daily operational performance.

Approved For Release 2000/06/06 : CIA-RDP80-00915A000100040001-9

Approved For Release 2000/06/06 : CIA-RDP80-00915A000100040001-9

Application Services is proposed as "the door to the user". It is the entry point for all Request for Computer Services (Form 930). It is responsible for all officially requested application development and maintenance, and will provide training and user consultation to OJCS users.

Processing Services will be responsible and accountable for providing processing capabilities and support capabilities necessary to improve reliability and availability for all processing requested of OJCS.

Approved For Release 2000/06/06 : CIA-RDP80-00915A000100040001-9

Approved For Release 2000/06/06 : CIA-RDP80-00915A000100040001-9

2.2 PROPOSED ORGANIZATIONAL CHARTS

Approved For Release 2000/06/06 : CIA-RDP80-00915A000100040001-9

Approved For Release 2000/06/06 : CIA-RDP80-00915A000100040001-9

OFFICE OF JOINT COMPUTER SUPPORT

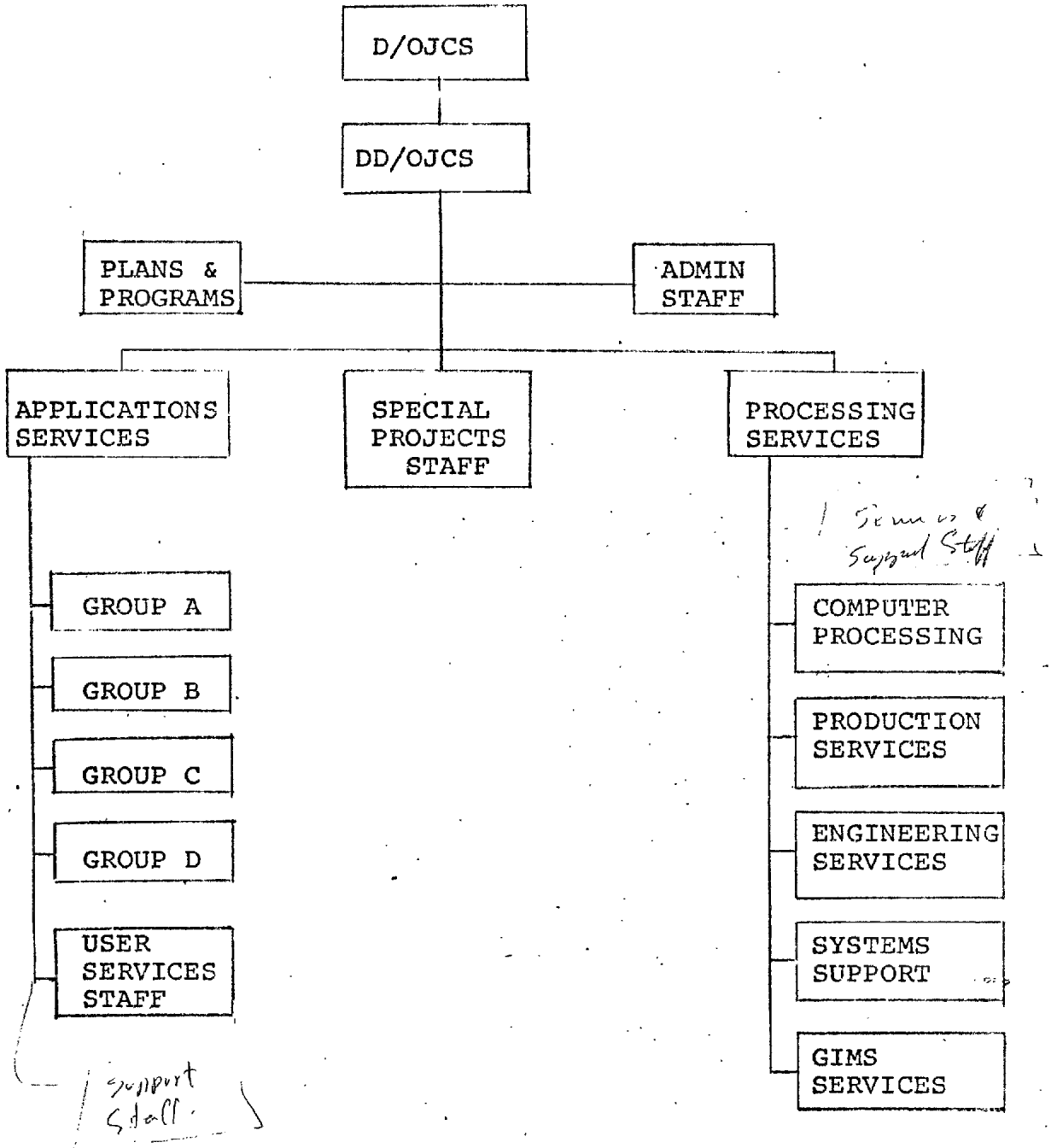

Approved For Release 2000/06/06 : CIA-RDP80-00915A000100040001-9

Approved For Release 2000/06/06 : CIA-RDP80-00915A000100040001-9

APPLICATIONS SERVICES

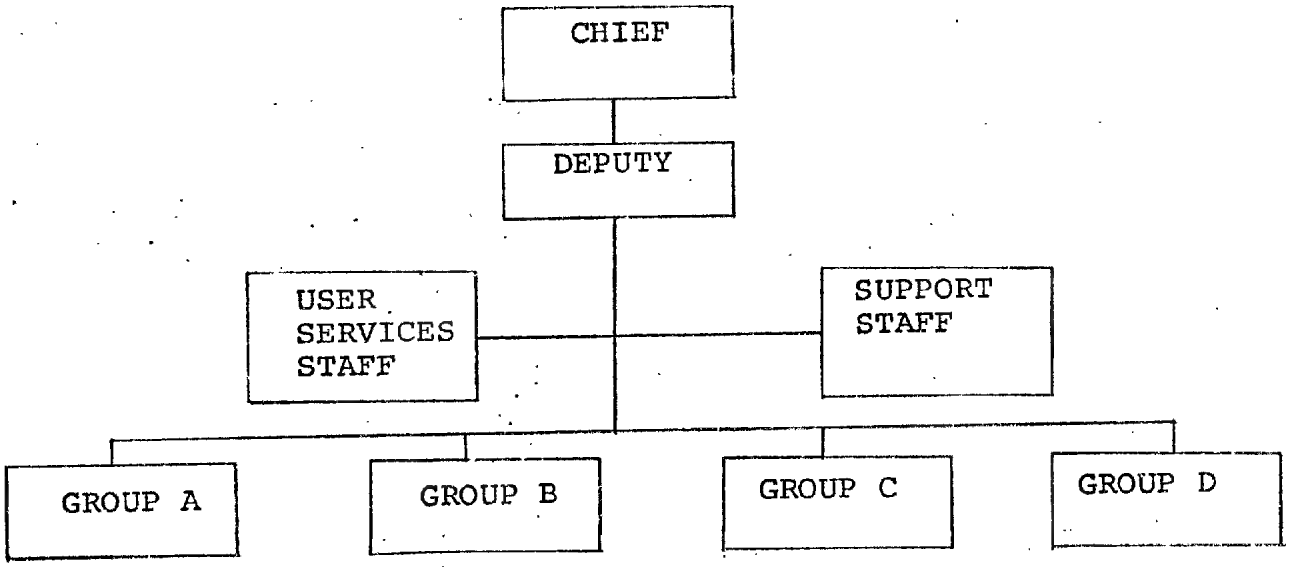

Approved For Release 2000/06/06 : CIA-RDP80-00915A000100040001-9

Approved For Release 2000/06/06 : CIA-RDP80-00915A000100040001-9

PROCESSING SERVICES

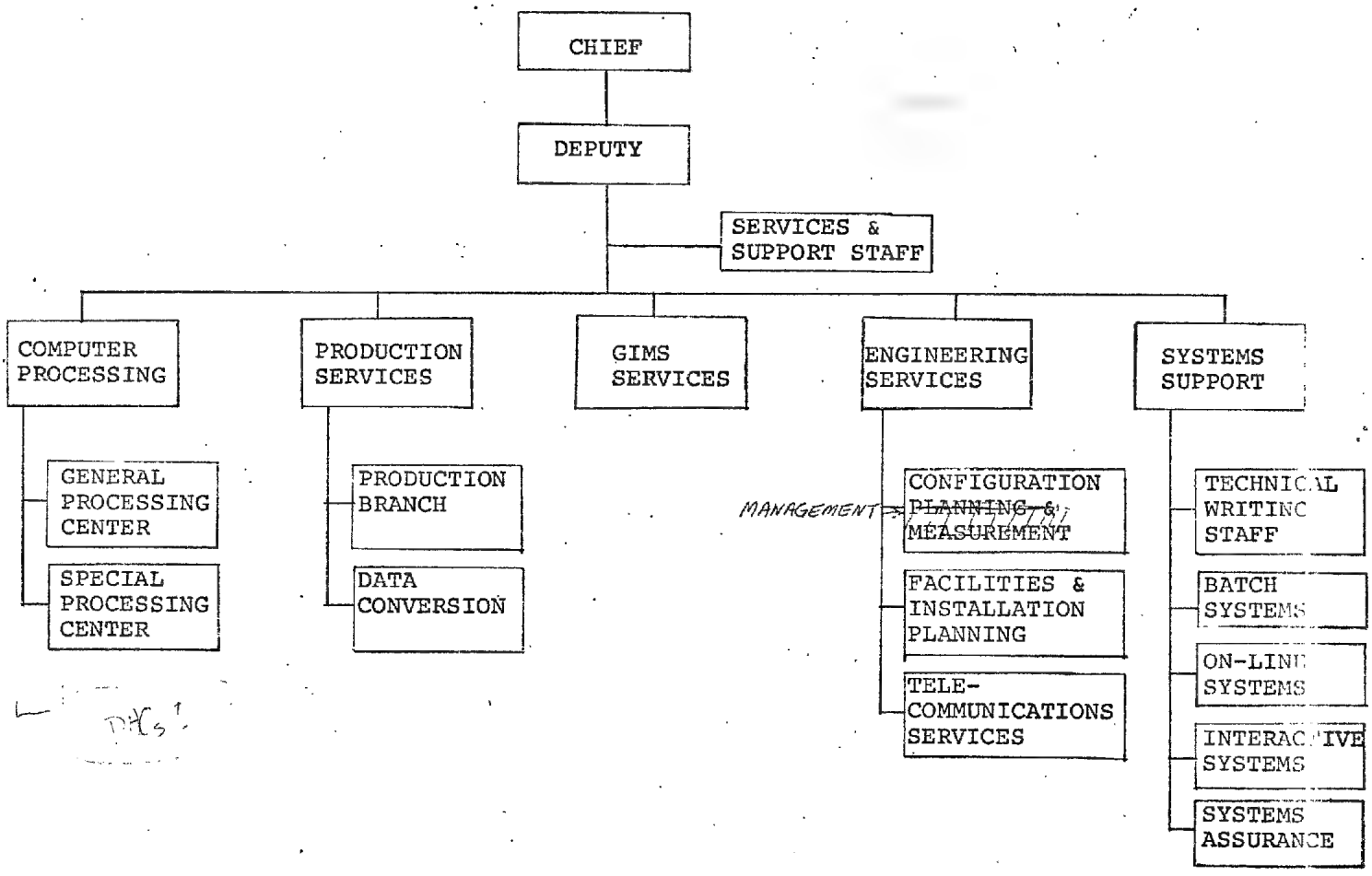

Approved For Release 2000/06/06 : CIA-RDP80-00915A000100040001-9

Approved For Release 2000/06/06 : CIA-RDP80-00915A000100040001-9

2.3.1 ADMINISTRATIVE STAFF

INTRODUCTION:

ILLEGIB

The Administrative Staff was changed only slightly from its present organization. The Security Officer and Executive Officer were moved to this staff from the Office of the

ILLEGIB

Director. [redacted] Support to the Security Officer in technical security is provided in the Plans and Programs Staff. The Executive Officer is the Chief, Administrative officer and is supported directly by the Administrative Staff. It seemed logical that the Chief Administrative Officer should be located in the Administrative Staff rather than in a separate component.

MISSION:

The Administrative Staff assists all OJCS components in matters of logistics, finance, training, personnel, security and administration. Staff specialists are provided for counseling on training, Agency regulations and procedures, procurement procedures, contracts, travel, security and budget.

FUNCTIONAL RESPONSIBILITIES:

The Administrative Staff is responsible for general support to the office in all matters of personnel, finance, logistics, and security. Included as standard services are the processing of personnel actions, maintenance of OJCS personnel soft files, physical space modification coordination, ordering of supplies, and services, current budget accounting and operation of the OJCS Registry.

The Personnel Officer shall act as secretary to the MZ Career Board. Career counseling for all OJCS employees and preparation of the Annual Personnel Plan are also functions of this staff.

The Finance Officer shall keep records as appropriate to show the current status of the OJCS operating year budget. This person will provide data as required to the Plans and Programs staff on budget status.

Approved For Release 2000/06/06 : CIA-RDP80-00915A000100040001-9

Approved For Release 2000/06/06 : CIA-RDP80-00915A000100040001-9

The Security Officer shall keep records of all persons having access to OJCS computer systems and will control the dissemination of passwords. This officer will have the responsibility for physical and personnel security within OJCS and will be responsible for insuring that all applicable Agency regulations are followed. The Security Officer will draft OJCS security standards and will coordinate these through the Plans and Programs Staff. This person will also coordinate with the Plans and Programs Staff on any matters of technical security.

The Logistics Officer shall keep records of all contracts and requests for procurement originating in the office. This person is also responsible for all matters relating to the physical space occupied by OJCS.

The Executive Officer is responsible for tracking all administrative actions of the office and insuring that these actions are accomplished in a timely and accurate manner.

Approved For Release 2000/06/06 : CIA-RDP80-00915A000100040001-9

Approved For Release 2000/06/06 : CIA-RDP80-00915A000100040001-9

ADMINISTRATIVE STAFF

FUNCTIONS

- Executive Officer
- Personnel Support
- Logistical Support
- Financial Accounting
- Personnel Security
- OJCS Registry
- Career Counseling

Files ? Records ?

Approved For Release 2000/06/06 : CIA-RDP80-00915A000100040001-9

Approved For Release 2000/06/06 : CIA-RDP80-00915A000100040001-9

Need a Branch breakdown of Plans Staff

Division

2.3.2 PLANS AND PROGRAMS ~~STAFF~~

Plans & Policy | Programs & Budget | Standards | Technology

INTRODUCTION:

The Plans and Programs Staff is proposed to satisfy the need for analysis and planning for OJCS' long-range goals. These plans guide the OJCS fiscal program submissions.

MISSION:

What about guiding R&D? Long range forecasts of technology and equipment need?

The Plans and Programs Staff shall be responsible for the development and active maintenance of long-range plans, resource requirements, fiscal programs, policies and standards needed by OJCS to satisfy its commitment to support the Agency's Automatic Data Processing Requirements. The long-range plans shall consist of a five year plan and a ten year forecast of new technology and techniques which are applicable to OJCS' needs.

FUNCTIONAL RESPONSIBILITIES:

The Plans and Programs Staff shall develop and maintain management information which is supported by regular submissions (set by Plans and Programs Staff) from the line-organizational components (Processing Services, Applications Services, and Special Projects). The management information will require consistent and constant analysis of the daily performance data, the active five year plan, and monitoring of the operating year and program year budget submissions.

Further, the management information shall include: the tracking of all active OJCS projects in conjunction with and in addition to OJCS' Management by Objectives (MBO) and fiscal responsibilities, and Analysis of trends and performance data to identify operational and performance short-comings.

The planning function shall consist of short-range and long-range plans and forecasting. Plans shall be developed to identify, allocate, and justify resource needs and services for fiscal program submissions. Short-range plans shall be developed by the line organizational components and coordinated with the Plans and Programs Staff for the operating and program years. Long-range plans shall be developed by the Plans and

Approved For Release 2000/06/06 : CIA-RDP80-00915A000100040001-9

Approved For Release 2000/06/06 : CIA-RDP80-00915A000100040001-9

and Programs Staff and coordinated with the line organizational components for the out (third through fifth) fiscal years. The Plans and Programs Staff shall also be responsible for forecasting (identifying, evaluating, and testing new hardware, software, and processing) technology and techniques that are applicable to OJCS planned responsibilities, services, and policies.

The forecasting responsibility shall be an active ongoing activity projecting technology developments with particular emphasis addressing future database management and technical security facilities needed to satisfy the Agency's future ADP needs.

The Plans and Programs Staff shall also be responsible for the coordination with the Office of Research and Development for ADP technology development.

The Plans and Programs Staff is responsible for preparation and maintenance of fiscal programs and budgeting and maintaining accurate and current status reporting of programmed and obligation accounting. — I thought accounting function is in Admin

This staff is the primary customer for monthly project accounting reports by office and project. This data is to be used as a primary tool for projecting services and resource requirements to support ADP requirements of the Agency's organizational components. The need and policy strategy for continuing the distribution of project activity reports to OJCS customers should be reassessed to affect a degree of accountability for the use of OJCS resources.

doesn't belong here

The Plans and Programs Staff is responsible for formulating policy alternatives to support OJCS obligations to Headquarters regulations 1-14 and 7-2. These policy alternatives must be consistent with the plans and programs required to support OJCS services and resources.

The Plans and Programs Staff is responsible for developing and publishing standards which encourage efficient use of present and projected resources. Particular emphasis shall be placed on technical security standards that provide procedural and technical processes to affect computer processing security. These standards are to be established to define quality assurance processes and procedures to influence the quality of OJCS products. Processing and application standards are drafted in the line-organizational components and submitted to Plans and Programs Staff for concurrence, development, and publication.

Approved For Release 2000/06/06 : CIA-RDP80-00915A000100040001-9

Approved For Release 2000/06/06 : CIA-RDP80-00915A000100040001-9

2.3.3 SPECIAL PROJECTS STAFF (SPS)

MISSION:

The Special Projects component manages the development of projects that are of such a magnitude that they require the direct attention and visibility of the Director, OJCS as determined by D/OJCS.

FUNCTIONAL RESPONSIBILITIES:

The management of these projects first includes the development of feasibility studies to determine the ability of computerization to satisfy the project's objectives. The feasibility studies are allowed with the development of proposals for project development.

Following customer acceptance of the project proposal, SPS develops and maintains Project Plans for management, system development, testing and quality assurance, and operating the proposed system. The Management Plan identifies the objectives, participants and organizations (both internal and external to OJCS), responsibilities, constraints, review and approval procedures, and the means for determining the effectiveness of the development and the management. It also includes milestones and actions required through the development, testing, and initial operational phases. The Management Plan also identifies the processes which will insure the clarity and legal soundness of procedures for Request for Proposal (RFPs) preparations, proposal evaluations, and contract monitoring of the project.

The System Development Plan includes the internal and external reference specifications. These specifications define the resource requirements and the facilities which are to be made available by the system to its users and operators.

The Testing and Quality Assurance Plan includes the procedures and processes necessary to gain customer acceptance of the system and shall identify plans for unit, sub-systems, and integrated system testing.

Approved For Release 2000/06/06 : CIA-RDP80-00915A000100040001-9

Approved For Release 2000/06/06 : CIA-RDP80-00915A000100040001-9

The Operational Plans identifies the resource and logistic requirements necessary for developing and operating the system. It also specifies the development of procedural and processing documentation necessary for maintaining serviceability of the system to its users.

SPS is responsible for developing the system and developing and maintaining the documentation necessary for the use and operation of the system. This documentation will be consistent with the management, system development, test and quality assurance, operational plans and standards produced by Plans and Programs Staff.

Project tracking and status reports are submitted to the Plans and Programs Staff at regular intervals (specified by Plans and Programs Staff) in support of the Management Information maintained by the Plans and Programs Staff.

Approved For Release 2000/06/06 : CIA-RDP80-00915A000100040001-9

Approved For Release 2000/06/06 : CIA-RDP80-00915A000100040001-9

2.3.4 APPLICATIONS SERVICES

ABSTRACT:

Applications Services is responsible for analysis, development and maintenance of computer applications for Agency components. In addition, Applications Services is responsible for providing a variety of user services which include consulting on all application related EDP matters and operating a training program to ensure that the skills of computer careerists and users are maintained at a high level. Because of the diversity of skills represented by Applications personnel and the variety of project assignments, there are four development and maintenance groups which are not aligned functionally, nor by customer area. Therefore, they are called Group A, Group B, Group C, and Group D.

Project Teams will be organized from Group resources to meet the needs of all active projects. The project teams, during their life, will be monitored and controlled by a Group Chief. An Applications Services Management Review Board will analyze projects, allocate resources, conduct technical reviews, and monitor progress of project team activities. The User Services Staff is responsible for consulting and operation of the training program.

MISSION:

The general mission of Applications Services is to assist Agency components in utilizing computers by analyzing requirements, and by developing and maintaining software support systems and programs to meet their needs. Applications Services has responsibility for monitoring development of software by other Agency components or their contractors, consulting on applications, operating a training program for all users, and coordinating systems requirements for minicomputer support of applications development. Applications Services must maintain an inventory of scientific, management, and EDP skills necessary to analyze, design, program, test, document, and maintain problem oriented software.

Approved For Release 2000/06/06 : CIA-RDP80-00915A000100040001-9

Approved For Release 2000/06/06 : CIA-RDP80-00915A000100040001-9

FUNCTIONAL RESPONSIBILITIES:

Applications Services is responsible for the control and management of all Applications Services projects. This includes the following:

- projecting the Applications Services skill inventory needs required to meet total work requirements, and tasking the Group Chiefs to recruit and train to meet these needs;
- establishing technical standards for control, development, testing, and documentation of projects; documentation of what aspects of "project"?
- scheduling technical reviews of all projects at critical milestones;
- adjusting priorities and skills to maintain project schedules at cost; and
- preparation of all final documentation necessary to complete a project for turnover to production.

Application Services and Support Staff is responsible for providing all the external support and facilities required by Applications Services to accomplish its mission. This staff is responsible specifically for:

- maintaining all normal administrative, logistical, budgeting, and statistical services;
- providing data necessary to determine schedules and costs of projects;
- establishing and maintaining quality control standards for applications;
- maintain documentation of applications;
- managing the delivery of completed applications to the Production Services Group of Computer Processing Services.
- directing support to the Group Chief and the Project Leader (PL) in providing or arranging for special support which is required to meet project goals;

Approved For Release 2000/06/06 : CIA-RDP80-00915A000100040001-9

Approved For Release 2000/06/06 : CIA-RDP80-00915A000100040001-9

- negotiating with other OJCS components and Agency offices for special hardware, system software, test software, or contract services required by the project; and

- assisting with documentation to include microfiche and microfilm.

GROUPS A, B, C, and D are responsible for:

- reviewing all project requirements and establishing standards to control the projects;

- selecting project leaders and members, including negotiation with other Group Chiefs, for the duration of a project;

- reviewing and critiquing design, solution, algorithms, human engineering, programming techniques, structures, and efficiency of all projects;

- identifying support requirements and coordinating these through the Support Staff to insure the successful completion of all projects;

- certifying a project or project phase complete and ready for quality control and/or production;

- coordinating the writing of a contract with the prospective Project Leader and customer which specifies projected utilization of resources, milestones, review points, deliverables, and completion dates of the project. In addition, the contract will be coordinated with the Deputy Chief for User Services and Support whenever production responsibility for the application is to be required of Computer Processing Services;

- maintaining a complete individual inventory of personnel skills and capabilities;

- maintain time phased records of project assignments with task priorities for each individual assigned;

- recruiting and training personnel required to meet the Group "skill pool" requirements'

Approved For Release 2000/06/06 : CIA-RDP80-00915A000100040001-9

Approved For Release 2000/06/06 : CIA-RDP80-00915A000100040001-9

- negotiating with Production Services to provide Application Specialists for production of completed projects;
- maintaining technical libraries, literature, and reference material required for the skills in their group;
- managing the career development of members of the group; and
- evaluating Group personnel by either writing or reviewing the fitness reports, performance appraisals and other periodic reviews.

USER SERVICES STAFF:

The User Services Staff is responsible for:

- developing and presenting EDP training courses for Agency personnel;
- assisting users in resolving problems with programming languages and other difficulties related to applications development;
- provide systems and the technical support to minicomputer applications developed by Applications Services personnel.

APPLICATIONS SERVICES REVIEW BOARD:

This Board is composed of the Chief, Applications Services as Chairman, the two Deputy Chiefs, and the Group Chiefs as permanent members. The Chairman may appoint temporary members as required. The Management Review Board will review status, schedules, costs, priority, and requested or recommended changes to projects and make necessary resource adjustments between Groups to meet requirements. It will also review requirements for major new projects.

only with this on board

Approved For Release 2000/06/06 : CIA-RDP80-00915A000100040001-9

Approved For Release 2000/06/06 : CIA-RDP80-00915A000100040001-9

2.3.4.1 GIMS MANAGEMENT GROUP CHARTER

The development of new GIMS (Generalized Information Management System) applications will be controlled by the GIMS Management Group (GMG). The group will be responsible for reviewing and approving all new GIMS applications at the following checkpoints:

- Feasibility study.
- Project Proposal.
- Preproduction Impact Evaluation.

The GIMS Management Group will be headed by the senior Applications Services GIMS technician. Permanent membership includes an experienced GIMS technician from each development group in Applications Services and two senior GIMS systems technicians from the GIMS Services component of Computer Processing Services. Additional temporary appointments to the group will be made as necessary by the Chief/GMG.

The project leader from Applications Services is responsible for providing the technical details in writing to support the GIMS application at the feasibility study checkpoint. This will include an estimate of the amount of resident disk storage to support the production data base. The GIMS Services component of Computer Processing Services will allocate this space on a development data base for use of the project leader upon approval of the feasibility study. The GMG will forward the requirement for disk storage space to the GIMS Services component of Processing Services.

Detailed system design will be presented at the project proposal checkpoint. The project leader will be responsible for making any design changes recommended by the GMG. Final approval of the proposal will be the responsibility of the GMG.

The last checkpoint in the development cycle of a GIMS application will be the evaluation of the impact on other production applications when the development is completed. The GIMS Services component will present the results of the evaluation in writing to the GMG.

Approved For Release 2000/06/06 : CIA-RDP80-00915A000100040001-9

Approved For Release 2000/06/06 : CIA-RDP80-00915A000100040001-9

The decision to transfer an application from the development data base to the production data base will be made by the GMG at this time.

The project leader will turn over to the GIMS Services component all documentation. The GIMS Services component will be responsible for bringing the application up on the production data base. The production data base to be loaded on the GIMS production system will be a copy of the development data base provided by the project leader.

Since GIMS Services is responsible for assessing impact and creating the production data base, all estimates made by Applications Services for completion of GIMS application must be coordinated with GIMS Services. In case of any problem, the Chief of the GIMS Management Group will resolvelthe issue and his decision is final.

Approved For Release 2000/06/06 : CIA-RDP80-00915A000100040001-9

Approved For Release 2000/06/06 : CIA-RDP80-00915A000100040001-9

2.3.5 PROCESSING SERVICES

ABSTRACT:

Processing Services is responsible for managing all OJCS computer processing facilities and production services. This component is responsible for the stability and responsiveness of the operational center to meet Agency data processing requirements on a short term basis. Information must be provided to the Plans and Programs Staff on all processing trends which affect the stability and responsiveness of the OJCS long-range service objectives.

Processing Services will consist of five distinct components, each having a specific responsibility for stability and responsiveness. These components are:

GIMS Services

Engineering Services

System Support

Computer Processing

Production Services

Procurement of equipment ?

Approved For Release 2000/06/06 : CIA-RDP80-00915A000100040001-9

Approved For Release 2000/06/06 : CIA-RDP80-00915A000100040001-9

2.3.5.1 Charter for the Processing Services Review Group (PSRG)

The PSRG (Processing Services Review Group) reviews all computer usage requirements and is chaired by the Chief of Processing Services. The members are the Chief of: Engineering Services, GIMS Services, System Support and Computer Processing. The Deputy Chief of each component is the only alternate in the absence of the Chief. The Computer Processing component schedules resources non-processing services requirements and all processing services such as: weekend production services, system development software test, user testing for new system, hardware engineering changes, etc. The PSRG also publishes a weekly schedule for all computer systems' activities. This schedule will cover a minimum of a two week period.

Approved For Release 2000/06/06 : CIA-RDP80-00915A000100040001-9

Approved For Release 2000/06/06 : CIA-RDP80-00915A000100040001-9

2.3.5.2 Computer Processing

MISSION:

Computer Processing is responsible for the operation of all computer equipment installed within the OJCS Computer Center and within those remote job entry sites associated with the batch production system (as of May, 1976 the remote sites were located at [redacted] Chamber of Commerce, Key, and Room 4F50 in Headquarters). This component will schedule computer center operations to assure maximum service to users. It will also schedule time for maintenance, configuration changes, system testing and other special requirements levied by the Processing Services Review Group.

25X1A

FUNCTIONAL RESPONSIBILITIES:

Computer Processing is divided into two organizational components. The Special Processing Center manages the GC47 center and the General Processing Center manages the GC03 Computer Center (Room 1D16 and the remote sites are considered to be extensions of GC03). In support of the actual operation of the computing equipment, each computer center maintains a tape and disk library for retention of software systems and data and each center insures that supplies (forms, cards, paper tape, etc.) are available for day-to-day processing. Each center shall maintain a receiving and distribution point for accepting processing input and releasing processing output to users and to the OJCS Registry.

The centers shall provide an additional customer service by implementing tape/data archival standards and procedures for long term storage of critical software systems and data for historical and contingency purposes. All activities shall be conducted in accordance with security standards and procedures established by the Plans and Programs Staff.

Approved For Release 2000/06/06 : CIA-RDP80-00915A000100040001-9

Approved For Release 2000/06/06 : CIA-RDP80-00915A000100040001-9

COMPUTER PROCESSING

- Operation of the GC03 Center (including 1D16 and remote sites).
- Operation of the GC47 Center.
- Maintain tape and disk libraries.
- Support tape/data archival procedures.
- Maintain adequate supplies (forms, magnetic tape, disk packs, paper tape, etc.) for day-to-day processing.
- Provide a receiving and dispersing point in each center for accepting jobs and releasing output.

Approved For Release 2000/06/06 : CIA-RDP80-00915A000100040001-9

Approved For Release 2000/06/06 : CIA-RDP80-00915A000100040001-9

2.3.5.3 Production Services

INTRODUCTION:

Production Services was formed to join together all elements involved in the processing of production applications. Originally this group contained the Production Branch, and Data Base Services Branch of User Support Division, and the EAM and Keypunch sections of Operations Division as defined in the present organization. DBSB was originally included in Production Services because of the GIMS production work which interfaces with Production Branch production applications. The GIMS functions of DBSB were later split out into separate GIMS system group. The GIMS system group was created to give a single focus and concentrated resources to handle GIMS system management.

MISSION:

The mission of Production Services is to provide timely support and services to all OJCS customer offices for data preparation, EAM services, production application processing and report distribution.

FUNCTIONAL RESPONSIBILITIES:

Production Services is responsible for all OJCS functions related to data preparation, EAM services, production applications processing, and report distribution. They are the official OJCS customer contact for these functions.

Production Services is responsible for scheduling due dates for all production work related to these functions including the establishment of priorities that are necessary to meet customer deadlines. Production Services is responsible for identifying conflicting priorities and bringing these conflicts to the Chief, Processing Services through the PSRG for resolution.

Production Services is responsible for identifying needed standards in any area of production processing and will enforce all existing OJCS program and production standards.

Approved For Release 2000/06/06 : CIA-RDP80-00915A000100040001-9

Approved For Release 2000/06/06 : CIA-RDP80-00915A000100040001-9

Production Services is responsible for the accepting of new production requirements from customer offices and from applications services. In this role they will review the requirement for technical, scheduling and staffing implications. New production applicantions will adhere to OJCS standards before acceptance.

The Data Conversion Branch will provide and operate EAM, keypunch, data conversion and reports distribution facilities. This branch is responsible for coordination with Engineering Services on all matters related to EAM, keypunch, data conversion, and reports distribution hardware, facilities, and maintenance requirements. The Production Branch will provide and maintain a centralized Library System for the storage and retrieval of source, load and JCL programs. In addition they will provide a central repository for applications systems and program documentation.

The Production Branch also initiates the continuance review for each production application as scheduled by the Chief, of Applications Services.

In accepting an application for production processing the Production Branch assumes the responsibility for archival storage for all data for backup or for customer needs. They are responsible for coordinating with the Computer Processing tape librarian to insure that archival tape procedures and standards are adequate for data integrity. Production Branch is also responsible for coordination with Applications Services for production program maintenance as needed.

In support to the Systems Assurance Group in Systems Support, Production Branch will provide production application job streams and will verify test results. Quantitative data on EAM, data conversion, reports distribution and applications processing will be provided to the Chief, Processing Services and to the Chief, Plans and Programs Staff.

Approved For Release 2000/06/06 : CIA-RDP80-00915A000100040001-9

Approved For Release 2000/06/06 : CIA-RDP80-00915A000100040001-9

PRODUCTION SERVICES

- processing of batch production applications.
- maintenance of a production and development program library.
- quality assurance of production applications. testing?
- maintenance of a program documentation library.
- storage of archival material for all production applications
- EAM services.
- keypunch and data entry services.
- reproduction and distribution of reports.
- production applications data security.

Approved For Release 2000/06/06 : CIA-RDP80-00915A000100040001-9

Approved For Release 2000/06/06 : CIA-RDP80-00915A000100040001-9

2.3.5.4 Engineering Services

INTRODUCTION:

Engineering Services was established to bring together all functions necessary to manage the system configuration. Those activities include short term configuration planning for all hardware related activities, system performance measurements, and the auditing of resource utilization. Engineering Services thus has the responsibility to provide system reliability and availability to meet Office requirements and goals at any point in time. This component also has the responsibility to provide icnreased capacity to meet the short term goals of the Office.

The planning and measurement capability was taken from SPMS of SED in the previous organization, hardware activity support came from HSB of OD, and resource utilization tracking is provided by adding the functions performed by RMB of OD and the VM systems administrator. Additionally, COMTEN software support was added from ISB of SED. Elements of system configuration management which will not be included in Engineering Services are: System software support and the GIMS Services support.

MISSION:

Engineering Services' mission is to manage all OJCS system configurations and insure that necessary system resources are available to satisfy processing requirements for the short term. In order to perform its mission, Engineering Services is divided into three organizational components: Configuration Management, Facilities Installation Planning, and Telecommunications Services.

FUNCTIONAL RESPONSIBILITIES:

Configuration Management provides planning and implementation coordinating for short term configuration changes to provide additional processing capability or to insure system reliability and availability. An auditing function is performed to gather

Approved For Release 2000/06/06 : CIA-RDP80-00915A000100040001-9

Approved For Release 2000/06/06 : CIA-RDP80-00915A000100040001-9

resource usage data for short term planning and for submission to the Plans and Programs Staff for long range planning and standards development. The audit function also identifies processing which exceeds the OJCS standards and provides this information to Application Services for corrective action. The trouble desk will be located in this component due to its close ties with the audit function. The problem tracking for hardware problems, beyond that of the normal day-to-day activities handled by the Telecommunication Services and Facilities Installation Planning component, will be used for analysis of the reoccurring problems.

The Telecommunications Services component is responsible for all equipment outside of the computer centers and for all terminals and remote device interfacing equipment in the centers up to the central processing channel. This component is also responsible for record keeping related to the maintenance of equipment characteristics, location, custodian, service calls, interface addressing records and such other data as is necessary to satisfy the components responsibilities.

The Facilities Installation component is responsible for all computer equipment within the computer centers except that which is the responsibility of Telecommunication Services. This includes all aspects of installation, relocation and maintenance. This component will provide detailed actions required to fullfil the actions requested by Configuration Managements plan.

Approved For Release 2000/06/06 : CIA-RDP80-00915A000100040001-9

Approved For Release 2000/06/06 : CIA-RDP80-00915A000100040001-9

ENGINEERING SERVICES

- Staff the Trouble Desk.
- Maintain Master drawings, records, and files describing the OJCS systems.
- Maintain equipment list, configuration files, problem/action report files and maintenance historics.
- Maintain floor plans, DASD/Application Configuration reports, and equipment configuration diagrams.
- Maintain history file for each piece of equipment, from this file report MTBF and MTTR data.
- Responsible for all vendor hardware maintenance and engineering changes.
- Coordinates the scheduling of preventative maintenance with the PSRG.
- Established maintenance coverage period requirements and prepares maintenance coverage period lists for equipment and the vendor points of contact.
- Drafts standards for equipment performance and reliability.
- Coordination for communication lines, power, environmental and security requirements with the appropriate service organization.
- Conducts site surveys prior to the installation of any remote device.
- Perform Project tracking for the installation of all equipment or services.
- Resolves and coordinates all customer problems related to hardware installation.
- Responsible for the acceptance testing and monitoring of burn-in of new terminals, remote devices and associated equipment.
- Maintain COMTEN software.
- Establish and monitor environmental and power services tolerances.

Approved For Release 2000/06/06 : CIA-RDP80-00915A000100040001-9

Approved For Release 2000/06/06 : CIA-RDP80-00915A000100040001-9

2.3.5.5 System Support Component

INTRODUCTION:

The System Support component was establish to provide central accountability for all system support. The system testing and system development functions were combined to minimize the coordination of these efforts. The systems measurement and problem tracking function of Engineering Services will provide the necessary checks and balances.

MISSION:

The mission of System Support is to provide software support for all central processors and their peripheral components in response to; error correction, reconfiguration or functional enhancements. The On-line and Batch services are separated and receive direct attention independent of each other.

FUNCTIONAL RESPONSIBILITIES:

The System Support component is responsible for the support of all OJCS systems software. The specific systems are: Batch Systems (OS, ASP, FORTRAN, PL/1, etc.), On-Line Systems (STAR, RECON, CICS, etc.), Interface Systems (VM, SEDIT, BATCHMON, etc.). System support to the operating systems and their sub-systems is done in three branches, BATCH systems, On-Line Systems, and Interactive Systems. Each branch will produce systems or sub-systems to accommodate new hardware or changes in configuration. Systems will also be produced to include new software, either locally modified or vendor supplied, to correct errors in the current system or to provide desired system enhancements or performance improvements. The Batch Systems support includes all of the peripheral components (GOULD, CALCOMP, Paper Tape, CDC page reader, etc.), in addition to those major operating systems previously listed.

System Support is also responsible for OJCS systems integrity through extensive testing. This function will be carried out

Approved For Release 2000/06/06 : CIA-RDP80-00915A000100040001-9

Approved For Release 2000/06/06 : CIA-RDP80-00915A000100040001-9

by the System Assurance Branch. There will be three members of this Branch with computer operations skill. These slots can only be filled by rotational assignments from the Computer Processing components. The System Assurance Branch will respond to all user problems involving the operating system.

A Technical Writing Staff is responsible for generating and distributing all systems documentation (User's Guide, Technotes, Operator Procedures, etc.). There also is a staff position for maintaining the OJCS Technical Library.

All system changes are coordinated with the PSRG (Processing System Review Group). All major system changes which involve hardware changes or major system release changes are coordinated with Engineering Services and are included in the short-range plans.

The Systems Support committee will be responsible for tailoring current systems and developing new systems in the short term to meet the needs of OJCS. It is understood that these needs are usually recognized and solutions developed by the Systems Support component and therefore the Chief of Systems Support is responsible and accountable for all software modifications to the system, both locally coded and vendor supplied.

Who is on this committee?

Approved For Release 2000/06/06 : CIA-RDP80-00915A000100040001-9

Approved For Release 2000/06/06 : CIA-RDP80-00915A000100040001-9

SYSTEM SUPPORT

PRIMARY POINTS:

1. BATCH (OS, ASP, FORTRAN, PL/1, etc).
2. On-Line (COLTS, STAR, CICS, etc).
3. Interactive (VM, SEDIT, BATCHMON, etc).
4. All System Documentation (Operator Procedures, User Guide, AFA).
5. All System Test and Assurance.
6. User interface for system problems.
7. Technical Library.
8. Schedule all major system changes with Engineering Services.
9. Schedule all changes with the PSRG.
10. Operating System Development (MVS, JES 3).
11. Technical Support for all benchmarks.
12. Duty Officers/ASP Technician/VM Technician.
13. Operator Training for each specific function.

Approved For Release 2000/06/06 : CIA-RDP80-00915A000100040001-9

Approved For Release 2000/06/06 : CIA-RDP80-00915A000100040001-9

2.3.5.6 GIMS SERVICES

INTRODUCTION

The GIM's Services component was established to bring together the majority of those support functions which are required by any major on-line system. Thus, there are several functions which will be duplicated in other components. The additional overhead is deemed to be acceptable in view of the importance of this on-line system.

MISSION:

GIM'S Services is to control all processing services which impact the GIMS System. This component will provide all maintenance and enhancements to the GIMS system and will be a member of the PSRG in controlling configuration and system software changes.

FUNCTIONAL RESPONSIBILITIES:

The GIM's Services component is responsible for all maintenance and or enhancements in the GIM's software and accountable performed by contract or staff employees. This component is also responsible for all processing servcies required by the CAM's project. When GIM's is running on a dedicated central processor, this component will generate specific detailed requirements for the generation of the operating system by the System Support component. GIM's Services will perform all testing and systems assurance. The GIM's Services component will have total control of all changes taking place on any isolated GIMs system and will be a member of the PSRG for controlling changes on any other systems shared by GIMS.

The GIM's Service component will be staffed with one full time measurement person. One of his or her functions will be to measure GIMS development applications and produce data needed for scheduling the application into production. Also, measurements will be used to improve the system or application design.

Approved For Release 2000/06/06 : CIA-RDP80-00915A000100040001-9

Approved For Release 2000/06/06 : CIA-RDP80-00915A000100040001-9

The GIMS Services component will staff the 24 hour DAC (Data Access Center) in 5D55, Headquarters, and perform all functions necessary for data integrity and data security. This group will also process all GIMS production work. Production Services and Computer Processing coordination is required for this function.

Problem tracking and analysis will be done by this component in parallel with Engineering Services. This duplication is necessary to insure a high visibility of the GIMS System.

The responsibility for all GIMS User documentation will be in this component. The training function will be in the User Services Staff of Applications Services.

Approved For Release 2000/06/06 : CIA-RDP80-00915A000100040001-9

Approved For Release 2000/06/06 : CIA-RDP80-00915A000100040001-9

GIMS SERVICES

1. Maintain current GIMS Systems.
2. Enhance GIMS Systems.
3. Staff the DAC (24 hours). 25X1A
4. Contract monitoring for [redacted] modifications.
5. CAMS Project.
6. Stand alone operating systems - fully specified and produced by System Support. Both HASP and OS. ?
7. GIMS measurement.
8. Problem tracking and analysis. relating to GIMS?
9. Processing of GIMS production applications.
10. Monitoring of GIMS operation.
11. Control of GIMS password access.
12. GIMS System planning.
13. GIMS data base integrity.
14. Serve as member of the GIM Review Group. ?

who serves as member?

Approved For Release 2000/06/06 : CIA-RDP80-00915A000100040001-9

Approved For Release 2000/06/06 : CIA-RDP80-00915A000100040001-9

2.3.5.7 Processing Services Support Staff

Processing Services Support Staff is responsible for the general administrative support necessary for the smooth functioning of day-to-day operations. Included within its functional responsibilities are:

- Contracting and procurement services for hardware for software products.
- Ordering and maintaining an inventory for all supplied and expendables.
- Preparation and maintenance of consolidated accounting records to include:
  - Monthly machine cost.
  - Personnel costs including overtime.
  - Expendable supply cost.
  - Maintenance bills and cost.
  - Other contract cost, and
  - Miscellaneous cost and changes.
- Coordinates all training for Processing Services including; course outlines, training requirements, and budgeting.
- Consolidates and Maintains required reports such as:
  - Production Reports.
  - Planning Reports.
  - Personnel Reports.
  - Program Call Information, and
  - Consolidated planning reports and papers.

who decides what is to be bought and how it is to be bought - lease or purchase?

Approved For Release 2000/06/06 : CIA-RDP80-00915A000100040001-9

Approved For Release 2000/06/06 : CIA-RDP80-00915A000100040001-9

SECTION III

OUTSTANDING ISSUES

3.1 INTRODUCTION

This section presents issues, organization shortcomings, and transitional functions that must be addressed in order to accommodate a successful reorganization.

Approved For Release 2000/06/06 : CIA-RDP80-00915A000100040001-9

Approved For Release 2000/06/06 : CIA-RDP80-00915A000100040001-9

3.1 KEY ISSUES

Two issues were raised that impact on the implementation of the proposed organization. The first issue is the problem of selecting people for key positions and the second issue is the overall transition from the present organization to the proposed organization.

1. Selection of Key People

Five key positions are present in the proposed organization:

Chief, Processing Services
Chief, Applications Services
Chief, Plans and Programs Staff
Chief, Special Projects
Chief, Administrative Staff

Because these positions have increased responsibility and resource control as compared with the present organization, the choice of appointment is critical. The most critical appointments are the Chief, Processing Services and the Chief, Plans and Programs Staff. The former because of the increase in responsibility, the latter because of new responsibilities.

The proposed organization attempts to align authority and responsibility. However, no organization can compensate for a lack of good management.

2. Transition to the New Organization

Organizational change is traumatic no matter how well it is handled. Previous changes have been unnecessarily hard because functional responsibilities were not adequately defined This transition must be carefully planned, documented, and done quickly.

Milestones in the transition are:

a) Identification of persons to assume the key positions cited above at the time of transition.

b) Identification of persons for deputies to all key positions.

c) DD/A approval of reorganization plan and key appointments.

d) Identification of division and branch chiefs candidates.

Approved For Release 2000/06/06 : CIA-RDP80-00915A000100040001-9

Approved For Release 2000/06/06 : CIA-RDP80-00915A000100040001-9

e) Evaluation of division and branch chief candidates by D/OJCS, DD/OJCS, and the appointees to the new key positions.

f) Assign all present employees by name to new organizations.

g) Notify PMCD of reorganization and present proposed staffing complement.

h) Identify all physical moves required by the new organization and construct a time chart for accomplishing these moves.

i) Map old resource packages to new resource packages and construct a plan for changing FAN numbers coincident with the start of a fiscal year.

j) Formally announce the new organization to all OJCS people. This announcement should be a meeting and the appointees to new key positions should be introduced. An organization description including functions for each component and all personnel assignments should be presented to each employee at this time (or by Division Chiefs following this meeting). To allow a relief valve for any individual having strong objectives to his or her assignment, a contact outside of the line element should be announced and made available for counseling.

k) Implementation of the new organization as soon as possible after the announcement.

l) Move offices as required to group components.

m) Construct a new staffing document based on analysis of functions as input to the next budget exercise.

The attachment is a sample mapping of the present organization into the proposed organization. The 30 April 1976 staffing complement was used as the base document for on-board strength.

Approved For Release 2000/06/06 : CIA-RDP80-00915A000100040001-9

Approved For Release 2000/06/06 : CIA-RDP80-00915A000100040001-9

3.2 POSSIBLE SHORTCOMINGS IN THIS PROPOSED ORGANIZATION

The proposed organization has created some problems and has left some problems unanswered. Listed below are those problems which were recognized and an estimate of their impact.

1. System Software Audit is within System Support and there will be no formal system turnover.

   - System Problem Tracking and Analysis is in Engineering Services and it becomes the only Qualtiy Assessment for the system software.

2. Local modifications to system software will be possible without a mechanism to consider overall user impact:

   - One person is now responsible for all system software changes and testing, Chief, System Support.

3. Redundancy is required for operating software support for On-Line and Batch systems:

   - Four additional computer specialist.

4. Separating systems programmers for GIMS from the Systems Support component:

   - Lack of system knowledge for indepth system interface code.

5. Reduced operator responsibilities:

   - Very limited career path except throuth Production Services and the three rotatinal slots in System Support.

6. GIMS applications will be well into the development cycle without a total understanding of the system impact:

   - This proposed organization is better but still not perfect. The application development process will be measured but not modeled, this makes the system impact information still too late to be effective.

Approved For Release 2000/06/06 : CIA-RDP80-00915A000100040001-9

Approved For Release 2000/06/06 : CIA-RDP80-00915A000100040001-9

7. Split responsibility for User Support:

   ° All user problems will go to Applications Services and some will be passed on to System Support and Telecommunication Services. Application Services will need to track all customer contacts which requires System Support and Telecommunication Service to resolve a problem.

8. DDO user interface (Consulting Services) has not be addressed:

   ° System Support will be required to provide this service.

9. System programmers for the telecommunications support will not be a part of System Support:

   ° There will be a loss of technical skills in the System Support component for telecommunication expertise.

10. Production Services requires many of the functions which are in the GIMS Services component (i.e., interface with the DAC).

   ° This problem will still require coordination as it does in the current organization.

11. GIMS systems have better control over the changes made to the operating system and hardware configuration, but not total control, except when GIMS is on an isolated central processor:

   ° System stability will not be as good as it could be until all GIMS systems are isolated.

Approved For Release 2000/06/06 : CIA-RDP80-00915A000100040001-9

Approved For Release 2000/06/06 : CIA-RDP80-00915A000100040001-9

APPENDIXES

Approved For Release 2000/06/06 : CIA-RDP80-00915A000100040001-9

Approved For Release 2000/06/06 : CIA-RDP80-00915A000100040001-9

APPENDIX A

PRESENT ORGANIZATIONAL STRUCTURE

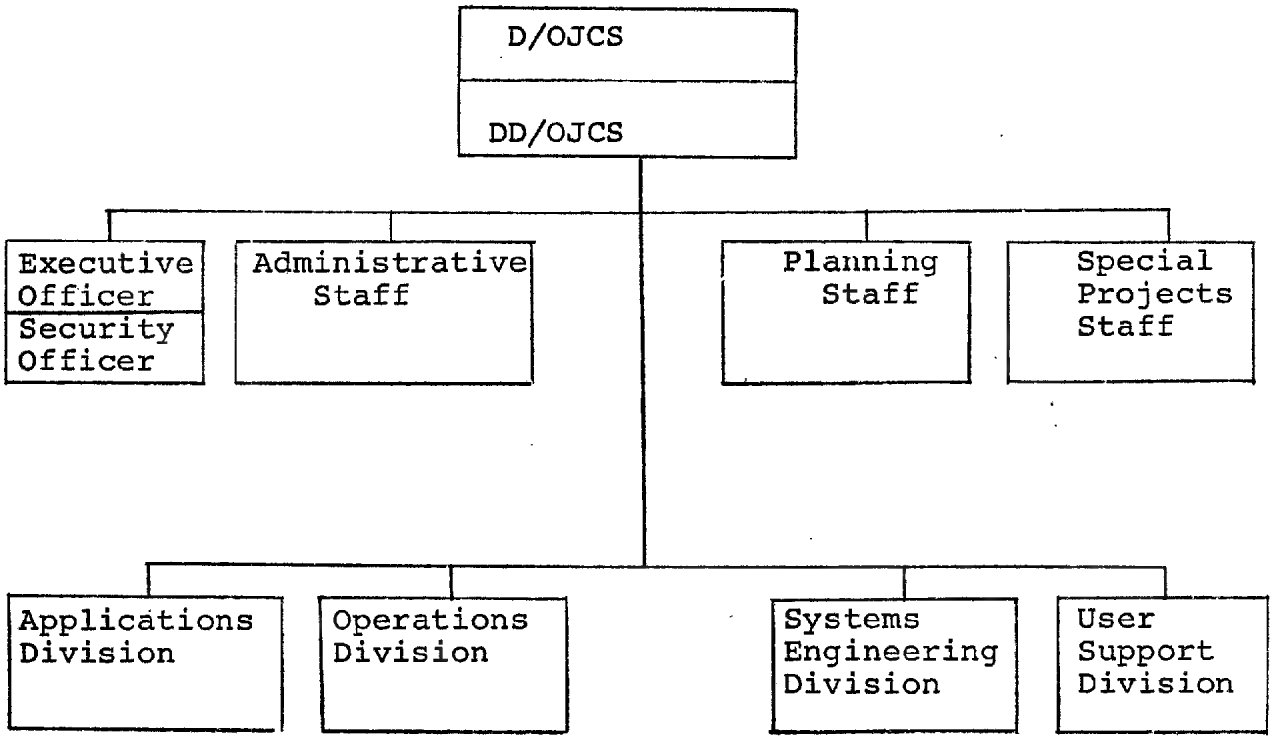

Approved For Release 2000/06/06 : CIA-RDP80-00915A000100040001-9

Approved For Release 2000/06/06 : CIA-RDP80-00915A000100040001-9

APPENDIX B

ASSUMED ORGANIZATIONAL STRUCTURE

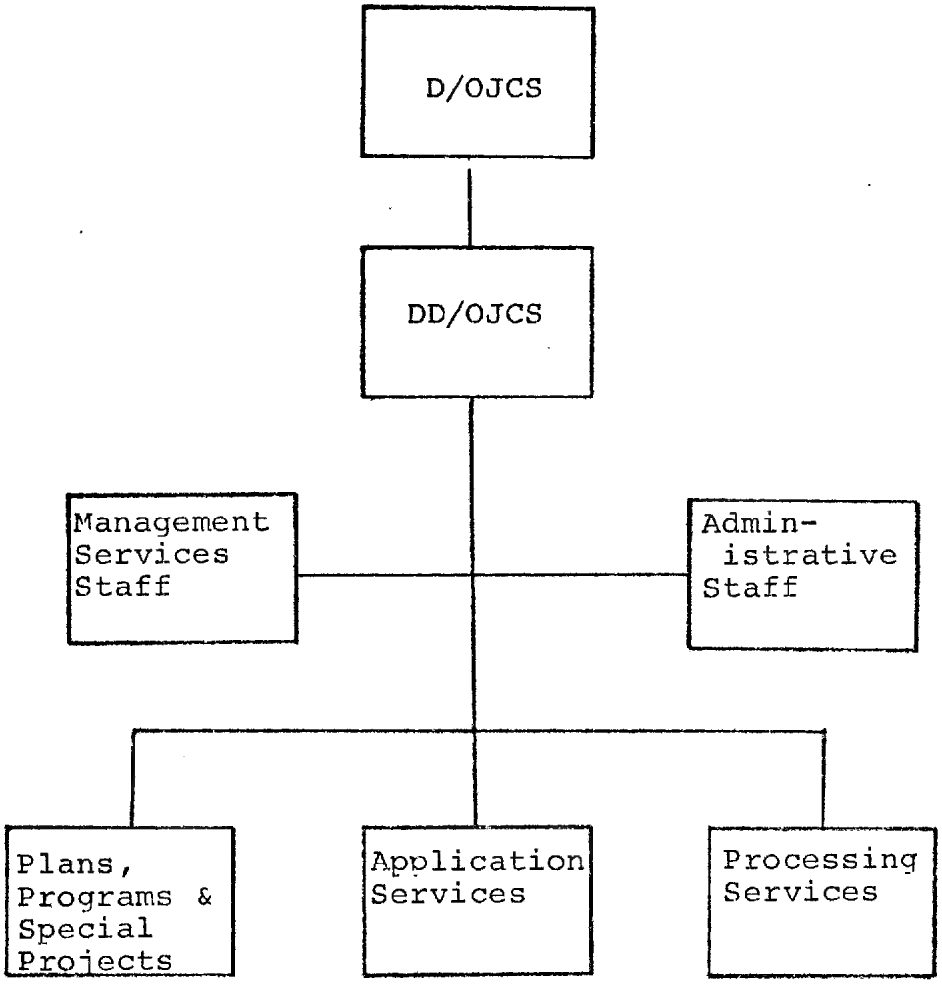

Approved For Release 2000/06/06 : CIA-RDP80-00915A000100040001-9

Approved For Release 2000/06/06 : CIA-RDP80-00915A000100040001-9

APPENDIX C

REORGANIZATION

3 Principal goals:

Improve the stability and responsiveness of the operating centers.

Provide a planning capability.

Thoroughly document the rationale for the new organization.

Steps needed:

Stability and Responsiveness

- Minimize the coordination required across organizational boundaries to support the daily operating environment.
- Sharply focus responsibilitity for all functions that have an immediate day-to-day impact on stability and responsiveness, including:
  - Hardware maintenance and maintenance of system software on the floor.
  - System measurement and tuning.
  - Priority control.
  - Production and data base management.
- Give priority to hardware and software maintenance for any problem which is seriously impacting current operations.

Planning

- Create a planning organization to plan on an on-going rather than ad hoc crisis-oriented basis (1-5 years).
- Link the planning cycle to the annual program and budget cycle.

Approved For Release 2000/06/06 : CIA-RDP80-00915A000100040001-9

Approved For Release 2000/06/06 : CIA-RDP80-00915A000100040001-9

- Provide trend information as a measurement of the adequacy of previous plans and as a basis for new planning initiatives.

Documentation

- Prepare a comprehensive organizational document describing the organizations, functions, and responsibilities of the organizational components and their methods of operation.

Approved For Release 2000/06/06 : CIA-RDP80-00915A000100040001-9

Approved For Release 2000/06/06 : CIA-RDP80-00915A000100040001-9

TASK GROUP CHARTER

1. Assume a basic organizational structure.

2. Clarify and resolve any basic issues with respect to that structure.

3. Break the organizational structure down into its smallest organizational components.

4. Define and document the detailed functions and responsibilities of each component.

5. Review to ensure that all known questions have been resolved or the issues with pros and cons have been identified.

6. Present findings to D/OJCS and DD/OJCS.

Note: Issues that are impeding progress of questions requiring clarification, may be brought to the attention of D/OJCS and DD/OJCS at any time.

Approved For Release 2000/06/06 : CIA-RDP80-00915A000100040001-9

Approved For Release 2000/06/06 : CIA-RDP80-00915A000100040001-9

AREAS OF RESPONSIBILITY THAT NEED TO BE PINNED DOWN

1. GIMS management from the womb to the tomb.

2. Development and design of hardware/software systems a year or more in the future.

3. Review and approval of new acquisitions [redacted] 25X1A

4. Monitoring users of operating systems to guard againt abuse.

5. Reviewing software developed elsewhere (e.g. by [redacted] to ensure its efficiency. 25X1A

6. Auditing our own applications software to ensure its efficiency.

7. Resource management - what should it consist of and what is an adequate level of effort.

8. Introduction of new software systems: testing, approval, and operating transition.

9. Where should special projects lie (CAMS, TADS, RAPID, etc.)?

10. Security responsibility below the SO.

Approved For Release 2000/06/06 : CIA-RDP80-00915A000100040001-9

Approved For Release 2000/06/06 : CIA-RDP80-00915A000100040001-9

APPENDIX D

OJCS/SPS ORGANIZATION STUDY CHARTER

MEMORANDUM FOR: Chief, Special Projects Staff, OJCS

SUBJECT : OJCS Management Study

1. This memorandum confirms and documents my verbal instructions for the Special Project Staff (SPS) to conduct a study of the Office of Joint Computer Support (OJCS) and provide recommendations for improving the management of operations and services provided by this Office.

2. Your charter for this study encompasses all facets of OJCS activities, including administration, planning, applications development, production, systems engineering, configuration control, equipment reliability and availability, and day-to-day operations. You are requested to provide recommendations that will improve customer services without the addition of personnel or hardware that is not included in the OJCS System Plan. Briefly, using our current and planned future assets, how can we do a better job? You should review the ADP control mechanisms now in effect and determine if a more productive system can be devised that does not conflict with the OJCS mission of providing services.

3. I am aware that this is a major task with which you are charged, and that solutions to the types of problems experienced by OJCS have eluded many managers of complex ADP systems. Nevertheless, I consider your Staff as being a well rounded body of professionals who should be capable of providing answers to many of the problems that continue to plague us, e.g., equipment availability, software problems, scheduling, and prioritizing of work, and operational and organizational procedures.

4. A copy of this memorandum is being provided to each of the Division Chiefs, to ensure that they cooperate with you in this study. If you should experience any problems in this area, please advise. I request that your study be

Approved For Release 2000/06/06 : CIA-RDP80-00915A000100040001-9

Approved For Release 2000/06/06 : CIA-RDP80-00915A000100040001-9

completed by 1 April 1976 in order that it may be reviewed at an OJCS Management Conference in mid-May.

25X1A

[redacted]

HARRY E. FITZWATER
Director of Joint Computer Support

cc: ea Div/Staff/OJCS
DDA
A/DDA

Distribution:
1 - each of the above
2 - O/D/OJCS

O/D/OJCS/HFitzwater/mlc/3March1976

Approved For Release 2000/06/06 : CIA-RDP80-00915A000100040001-9

ILLEGIB
Approved For Release 2000/06/06 : CIA-RDP80-00915A000100040001-9

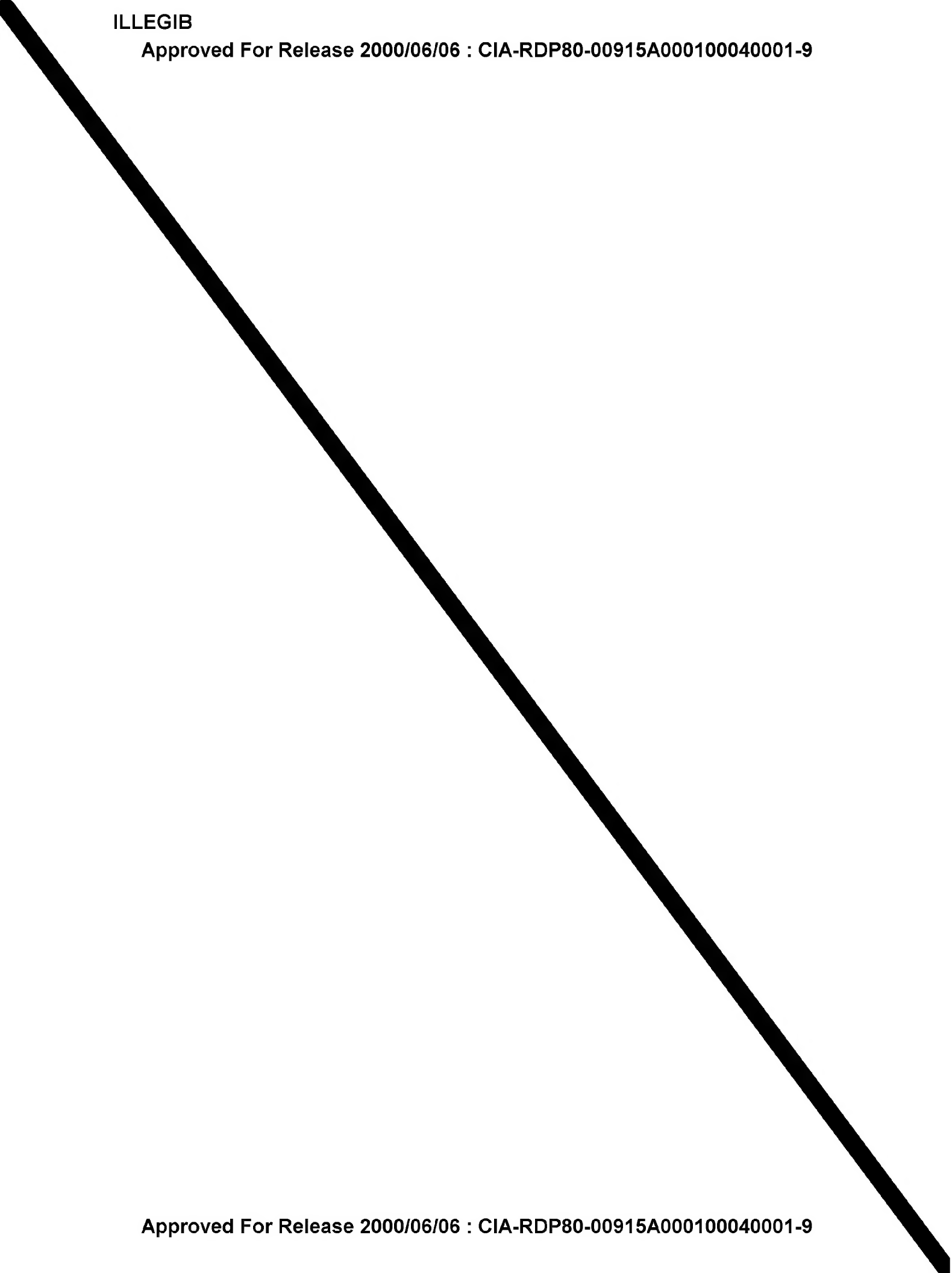

Approved For Release 2000/06/06 : CIA-RDP80-00915A000100040001-9

Approved For Release 2000/06/06 : CIA-RDP80-00915A000100040001-9

right people in leadership roles and it
we practice some discipline in management
actions.

P.S. I really didn't want to rewrite this
one - - - - It needs more than editorial
reworking.

Approved For Release 2000/06/06 : CIA-RDP80-00915A000100040001-9